Development of a Spray System for an Unmanned Aerial Vehicle Platform

Y. Huang, W. C. Hoffmann, Y. Lan, W. Wu, B. K. Fritz

Abstract. *Application of crop production and protection materials is a crucial component in the high productivity of American agriculture. Agricultural chemical application is frequently needed at specific times and locations for accurate site-specific management of crop pests. Piloted agricultural aircraft are typically used to treat large, unobstructed, continuous acreage crops and are not as efficient when working over small or obstructed plots. An Unmanned Aerial Vehicle (UAV), which can be remotely controlled or fly autonomously based on pre-programmed flight plans, may be used to make timely and efficient applications over these small area plots. This research developed a low volume spray system for use on a fully autonomous UAV to apply crop protection products on specified crop areas. This article discusses the development of the spray system and its integration with the flight control system of a fully autonomous, unmanned vertical take-off and landing helicopter. Sprayer actuation can be triggered by preset positional coordinates as monitored by the equipped Global Positioning System (GPS). The developed spray system has the potential to provide accurate, site-specific crop management when coupled with UAV systems. It also has great potential for vector control in the areas that are not easily accessible by personnel or equipment.*

Keywords. *Unmanned aerial vehicle, Autonomous flight, Wireless telemetry system, Spray system, Site-specific application.*

Application of crop production and protection materials is a crucial component of pest management in American agriculture. Agricultural application of fertilizers and chemicals is frequently needed at specific times and locations for accurate, site-specific management of crop pests. These applications are typically made through use of ground sprayers, chemigation, or aerial application equipment. While these methods are well suited to large acreage cropping systems they may become inefficient or cumbersome when applications must be made over small plot production systems. Unmanned Aerial Vehicles (UAVs), which are more maneuverable, cheaper to operate, and require less capitol costs, may serve to address this need.

A wide variety of UAVs has been, and continue to be, used extensively in military and civilian applications (Blyenburgh, 1999). Applications include archaeological prospecting (Eisenbeiss, 2004), rangeland management (Hardin and Jackson, 2005), assessment of grain crop attributes (Jensen et al., 2003; Hunt et al., 2005), and vineyard management (Johnson et al., 2001). In agriculture, UAVs have been used for pest control and remote sensing. The Yamaha model helicopter (Yamaha Motor Co., Ltd., Shizuoka-ken, Japan) was primarily developed and used for agriculture application, like insect pest control in rice paddies, soybeans and wheat. The RMAX model was introduced in 1997 and was later equipped with azimuth and differential Global Positioning System (GPS) sensor systems (Yamaha, 2004).

Miller (2005) reported an experiment to determine the effectiveness of using a UAV for dispersing pesticides to reduce human disease due to insects. He used an off-the-shelf Yamaha RMAX UAV outfitted with both liquid and granular pesticide dispersal devices, and a series of tests were performed to evaluate the effectiveness of the UAV to perform aerial pesticide delivery. Results showed that overall the UAV pesticide-dispersal system performed reliably.

For controlling arthropod vectors, particularly mosquitoes, aerial spray is an important method in insecticide application. UAVs provide a platform for potential application in vector spray applications. So far, no published applications of fully autonomous UAVs in agricultural or vector control spray applications were found. The spray that is produced by the UAV spray system is a space spray, which means that it is intended to move through an area. These types of sprays are intended to impact adult mosquitoes as they are flying. The vector control spray is for protection of people from biting and stinging arthropods for disease vector. The purpose of the study is to develop and/or optimize application systems that operate spray application. Through studies, the vector control spray application is eventually performed by maximizing the use of

Submitted for review in September 2008 as manuscript number PM 7673; approved for publication by the Power & Machinery Division of ASABE in August 2009.

Mention of trademark, vendor, or proprietary product does not constitute a guarantee or warranty of the product by the USDA and does not imply its approval to the exclusion of other products that may also be suitable.

The authors are **Yanbo Huang, ASABE Member Engineer,** Agricultural Engineer, USDA-ARS JWDSRC, Application and Production Technology Research Unit, Stoneville, Mississippi; **Wesley C. Hoffmann, ASABE Member Engineer,** Agricultural Engineer, USDA-ARS, Areawide Pest Management Research Unit, College Station, Texas; **Yubin Lan, ASABE Member Engineer,** Agricultural Engineer, USDA-ARS, Areawide Pest Management Research Unit, College Station, Texas; **Wenfu Wu,** Professor, Jilin University, Changchun, Jilin, China; and **Bradley K. Fritz, ASABE Member Engineer,** Agricultural Engineer, USDA-ARS, Areawide Pest Management Research Unit, College Station, Texas. **Corresponding author:** Yanbo Huang, USDA-ARS JWDSRC, Application and Production Technology Research Unit, 141 Experiment Station Rd., Stoneville, MS 38776; phone: 662-686-5354; fax: 662-686-5372; e-mail: yanbo.huang@ars.usda.gov.

 © 2009 American Society of Agricultural and Biological Engineers ISSN 0883-8542

non-chemical or least toxic chemical techniques to control pests and disease vectors. There have been numerous studies to determine the optimum or best droplet size to maximize vector control efforts (Himel, 1969; Lofgren et al., 1973; Curtis and Beidler, 1996; Crockett et al., 2002). When measuring droplet size from atomization equipment, the distance of the measuring system from the sprayer can be important. Droplets that are greater than 50 μm are generally not considered aerosol droplets (Matthews, 1988); therefore, these droplets have a great propensity of "settling out" or depositing on the ground. Settling out of the large droplets biases the droplet spectrum results toward smaller droplets measured by samplers placed away from the sprayer (Hoffmann et al., 2007).

The objective of this research was to develop a low volume spray system for a fully autonomous UAV system that can precisely apply sprays for both agricultural protection products and vector control applications. The emphasis with this present work is setting up the system for vector control applications.

Materials and Methods

UAV

The UAV selected that will ultimately serve as the platform for the developed spray application system is Rotomotion's SR200 (Rotomotion, LLC, Charleston, S.C.) (fig. 1). The SR200 is a Vertical Take-Off and Landing (VTOL) unmanned autonomous helicopter powered by a two stroke gasoline engine. It has a main rotor diameter of 3 m (118 in.) and a maximum payload of 22.7 kg (50 lb). An additional UAV helicopter, Rotomotion's SR20, which is battery-powered and has a main rotor diameter of 1.75 m (69 in.), was used to develop control software familiarity as well as test and troubleshoot operational software interface and routines.

Flight Control System and Telemetry

An Autonomous Flight Control System (AFCS) is an integrated module mounted on the Rotomotion helicopters. The AFCS receives commands from a ground control station via a wireless telemetry system and controls the actions of the helicopters. The AFCS consists of five modular components: 1) a 3-axis, 6 degree of freedom Inertial Measurement Unit (IMU); 2) a 3-axis magnetometer; 3) a GPS; 4) a proprietary radio receiver with servo interface and safety pilot override; and 5) a Linux-based flight computer.

An Application Programming Interface (API) developed with C++ provided the capability to send messages from the AFCS to the ground station and from the ground station as commands to the AFCS. Through use of a number of software and shell commands pushed from the ground control system through unique Internet Protocol (IP) addresses for each UAV, command routines such as Ground, GCS, Run-Sim, and Flyto can be used to control the UAV flight operations. The two most important commands are "Ground," which tracks and controls the flight of the UAV, and "Flyto" which defines the waypoints of the flight and actuates the servos based on GPS triggering.

On-Board Sprayer

A spray system was designed and constructed to be easily mounted onto the SR200. The spray system directly interfaced with UAV's electronic control systems to trigger spray release based on specified GPS coordinates and preprogram spray locations. The spray system consisted of four key components: a boom arm with mounted spray nozzles, a tank to house the spray material, a liquid gear pump, and a mechanism to control spray activation. All of

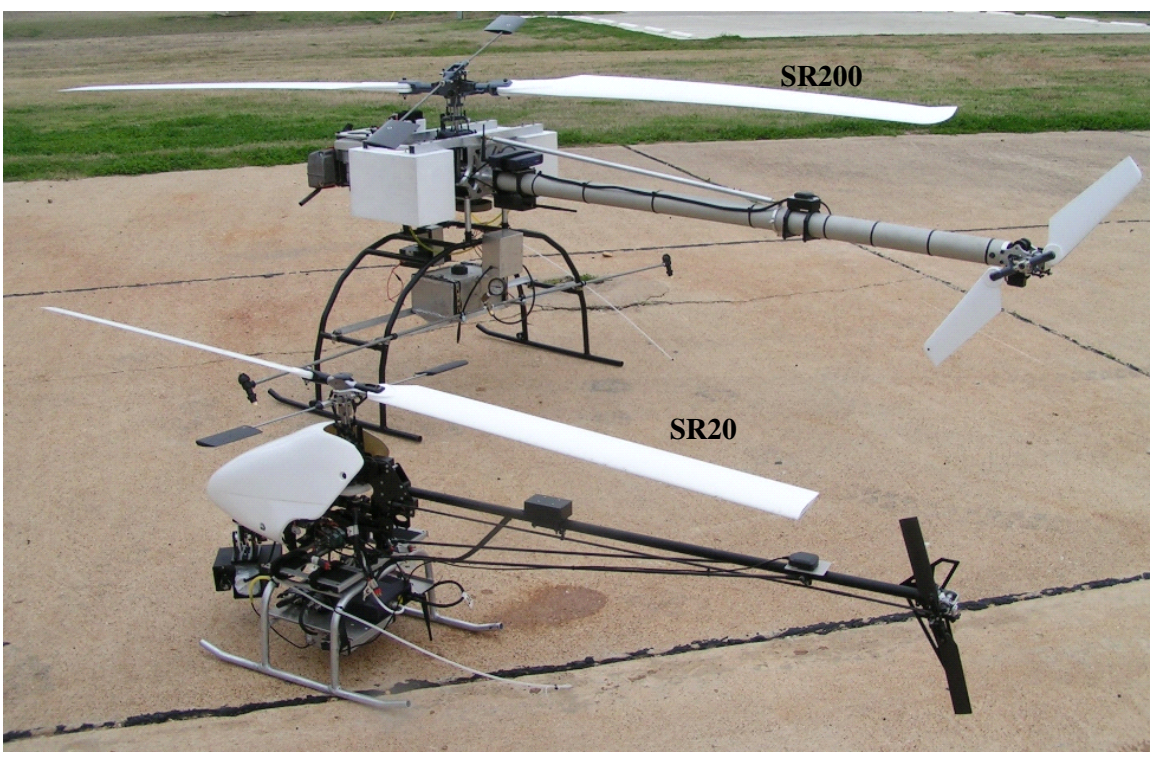

Figure 1. SR20 and SR200 of rotomotion.

these components, along with fuel and chemical, had to weigh less than the maximum payload of the SR200, which was 22.7 kg (50 lb). A routine was developed to guide component selection and maximize available mission payload capacities for optimum spray mission efficiency.

Sprayer Component Selection and Payload Configuration

The sprayer on the UAV was required to spray 14 ha (34.59 acres) of land on a single load at a low volume spray rate of 0.3 L/ha (4 oz/acre). To cover the 14-ha land, 4.2-L of chemical was needed. If the specific gravity of the chemical was 0.87 kg/L (7.4 lb/gal), it weighed 3.65 kg. If the spray swath width was 30 m (100 ft) and the air speed was 2.2 m/s (5 mph), the pumping rate of the sprayer was needed about 100 mL/min.

The SR200 UAV helicopter had a total gross payload of 22.7 kg (50 lb). Table 1 lists the weights of the UAV attachments and sprayer components. With a 2.25-kg (5-lb) standard undercarriage, the net useable payload was 20.45 kg (45 lb). If a 0.45-kg (1-lb) generator and a 0.45-kg (1-lb) high-performance telemetry were deducted, 19.55-kg (33-lb) payload was left for mechanical and electronic components of the sprayer, such as spray pump, pump speed controller, chemical, chemical tank, tubing, and nozzles.

The boom tubing with nozzles weighed 2 kg (4.4 lb). The spray pump weighed 0.4 kg (0.89 lb). The spray electric control box weighed 0.3 kg (0.67 lb). The spray tank weighed 1 kg (2.2 lb) plus 5 kg (11 lb) for 1.5 gal of chemicals. These parts reduced the net payload of the UAV to 10.85 kg (26.16 lb). The SR200 was originally equipped with two gasoline tanks. Each of the gasoline tanks had a volume of 7.56 L. The API (American Petroleum Institute) gravity of premium gasoline is 54 or 6.35 lb/gal (0.76 kg/L) so each full tank of gasoline weighed 5.75 kg. So, with 10.85 kg net payload left, only one full tank of gasoline could be loaded with the other tank empty. The SR200 used 3.78 L of gasoline for every 45 min. So, this much gasoline could hold the flight for 90 min.

Spray Nozzle Evaluations

The four spray nozzles evaluated for droplet size and flow rate were the Micronair Ultra-Low-Volume (ULV) –A+ nozzles (Micron Sprayers Ltd, Bromyard, Herefordshire, UK), the ASABE reference 250067 nozzles (Spraying Systems Co., Wheaton, Ill.), and two misting nozzles (Orbit Irrigation Products, Inc., Bountiful, Utah, and Ecologic Technologies, Inc., Pasadena, Md.).

Table 1. Weights of UAV attachments and sprayer components.

		Weight (kg/lb)
UAV attachments	Standard undercarriage	2.25/5
	Generator	0.45/1
	Telemetry unit	0.45/1
	One tank gasoline	5.75/12.68
Sprayer components	Boom tubing and nozzles	2/4.4
	Spray pump	0.4/0.89
	Control box	0.3/0.67
	Spray tank	1/2.2
	Chemical	5/11
Total		17.6/38.84

The droplet size spectrum for each nozzle was measured with a Sympatec HELOS Laser Diffraction System (Sympatec GmbH, Clausthal-Zellerfeld, Germany) while spraying water and BVA oil, a crop oil used to mimic real-world tank solutions thereby limiting the use of active ingredients in nozzle test. The BVA 13 ULV Oil® (Adapco, Inc., Sanford, Fla.) has very similar physical properties to the oil-based insecticide Anvil 10+10® (Clarke Mosquito Control, Roselle, Ill.) (Hoffmann et al., 2007).

The Helos system uses a 623-nm He-Ne laser and was fitted with a R5 lens, which made the dynamic size range from 0.5 to 875 μm in 32-sizing bins. The spray plume of the nozzles was traversed through the laser during each replicated measurement. Three replicated measurements were recorded for each spray solution and pressure system using each nozzle.

The most common term used to describe spray droplet size spectra is the volume median diameter (VMD), $D_{V0.5}$. $D_{V0.5}$ is the droplet diameter (μm) where 50% of the spray volume or mass is contained in droplets smaller than this value. Sauter mean diameter, $D_{V0.1}$ and $D_{V0.9}$ values, describe the proportion of the spray volume (10% and 90%, respectively) contained in droplets of the specified size or less. In the tests, the system software computed $D_{V0.5}$, $D_{V0.1}$, and $D_{V0.9}$. The data were also used to calculate percent of spray volume contained in droplets less than 50 μm (%Vol<50 μm) for all tests. The term (%Vol<50 μm) allows the user of this equipment to determine the portion of the applied material that will most likely stay aloft after an application and potentially impinge on a flying insect. The three replicated measurements were averaged. The General Linear Model (GLM) procedure of the SAS statistical software (SAS Institute Inc., Cary, N.C.) was used to perform statistical analysis of the measured data. With the SAS procedure, the Duncan's multiple range test can be performed on all droplet size parameter means with pump voltage, pump current and/or spray pressure given in the MEANS statement.

Spray Material Tank, Pump and Motor Assembly

A 1.5-gal spray tank was designed and built out of 6061 aluminum sheet metal (1.5 mm thickness) to a finished size of 11.4 × 17.8 × 25.4 cm (fig. 2). The bottom of the tank was sloped to the center to form a 2.5-cm deep channel into which a pipe fitting was fitted to feed the spray mixture to the pump assembly. Two internal baffle plates (11.4 × 17.8 cm) reduced sloshing of the spray material load during flight. The tank weighed 1 kg (2.2 lb) plus 5 kg (11 lb) for 1.5 gal of chemicals.

An all-plastic, low-volume, variable speed DC gear pump (EW-07620-00, Cole-Parmer Instrument Company, Vernon Hills, Ill.) was used to pump the liquid from the tank to the nozzles. A PWM (Pulse Width Modulation) controller (fig. 3) was designed and constructed to control the DC pump motor speed through a D/A output terminal and a servo board analog output or a potentiometer using an inexpensive PWM chip (TL494CD, Texas Instruments, Dallas, Tex.). The voltage delivered to the DC pump motor was in pulses with the pump speed determined by the modulated pulse width.

Two boxes were constructed to make the two electrical components of the sprayer weather-proof and electrically shielded (fig. 4).

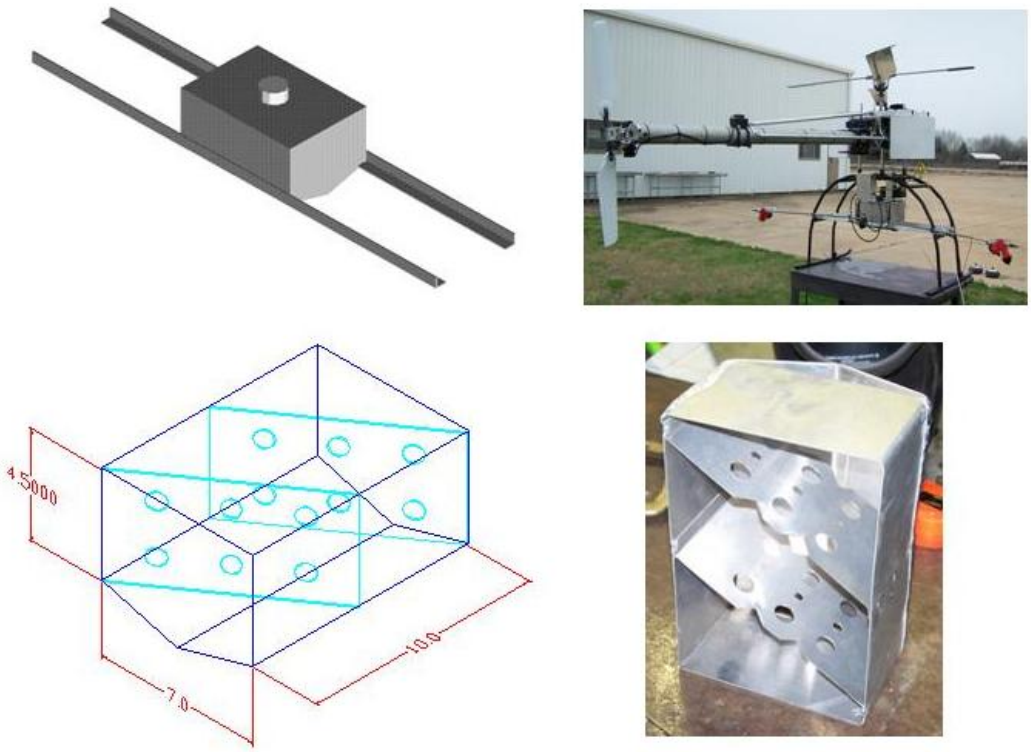

Figure 2. Computer-aided model and design of the tank with baffles, and the exterior and interior of the real tank.

The UAVs were equipped with two servo boards to control the servos on the helicopter. Servo board A controls the swashplate, tail, and throttle servos. Servo board B was generally used for payload controls and contains unused pins for additional servos. Although servo board A controlled the swashplate, tail, and throttle servos, a number of pins on the board were unused. Pins SA7 were used for sending the pump speed control signal to the PWM controller (fig. 5).

Integration of the mechanical and electrical components of the spray system resulted in a modular spray system that was powered from an onboard 12-VDC power supply (fig. 6). Spray system actuation and flow rate modifications were done through a servo control to turn on and off of the spray system and change the pump motor speed and hence the flow rate of spray. Servos were installed and tested to electrically control the on/off of the motor control box and the speed of the pump motor. The servos were controlled with the shell command *flyto* under Linux shell in the ground laptop that actuated the servo plugged in SA7 on servo board A to move it all the way in one direction. To toggle the servo position, a shell command defined digital count values between 0 and 1024 which linearly varied the applied voltage at the servo output.

Results and Discussion

Results from the nozzle droplet sizing and flow rate testing as well as the integration and testing of the developed spray system are detailed below.

Nozzle Study

The droplet spectra of the four different nozzles operating with water are presented in table 2. The results indicate that the Ecological Tech misting nozzles produced the minimum droplet size. However, when spraying BVA oil, the Micronair ULV–A+ nozzles had a much better plume pattern of spray atomization.

For vector control, the flow rate through the Micronair ULV-A+ nozzle was higher than desired so the orifice into the nozzle was modified by closing the original orifice and drilling a 220-μm orifice in the metering insert for the nozzle. The droplet size spectra was then measured with BVA Oil as the spray solution. This modification to the nozzle with a moderate power usage (6 VDC and 2.2 A) resulted in a VMD ($D_{V0.5}$) less than 47 μm with more than 60% of the spray volume in droplets < 50 μm when the pump voltage is equal to or less than 6 V with a corresponding spray pressure of 34 psi or less (table 3). With the pump operating at 10 v and a spray pressure of 338 kPa (58 psi), the nozzle produced a VMD of 66.26 μm with 21.07% of volume contained in droplets < 50 μm. $D_{V0.1}$ and $D_{V0.9}$ had similar characteristics with $D_{V0.5}$.

A 620-g, 10- × 4- × 3-cm Lithium-Polymer battery with a nominal voltage of 11.1V and a capacity of 2100 mAh was used to power the sprayer during the test. In this way, for 6 V and 2.2 A, the sprayer could run about 57 min, and for 12 V and 3.5 A, it could run about 38 min.

Spray System Integration with UAV and Flight Control System

Figure 7 is a plot showing the relationship between the PWM pump speed control and the servo voltage as varied using the ground control laptop and required shell command. They are highly correlated with a strong linear relationship (R^2 = 0.9978), which results in an accurate, proportional control response of the spray pump speed and hence the flow rate.

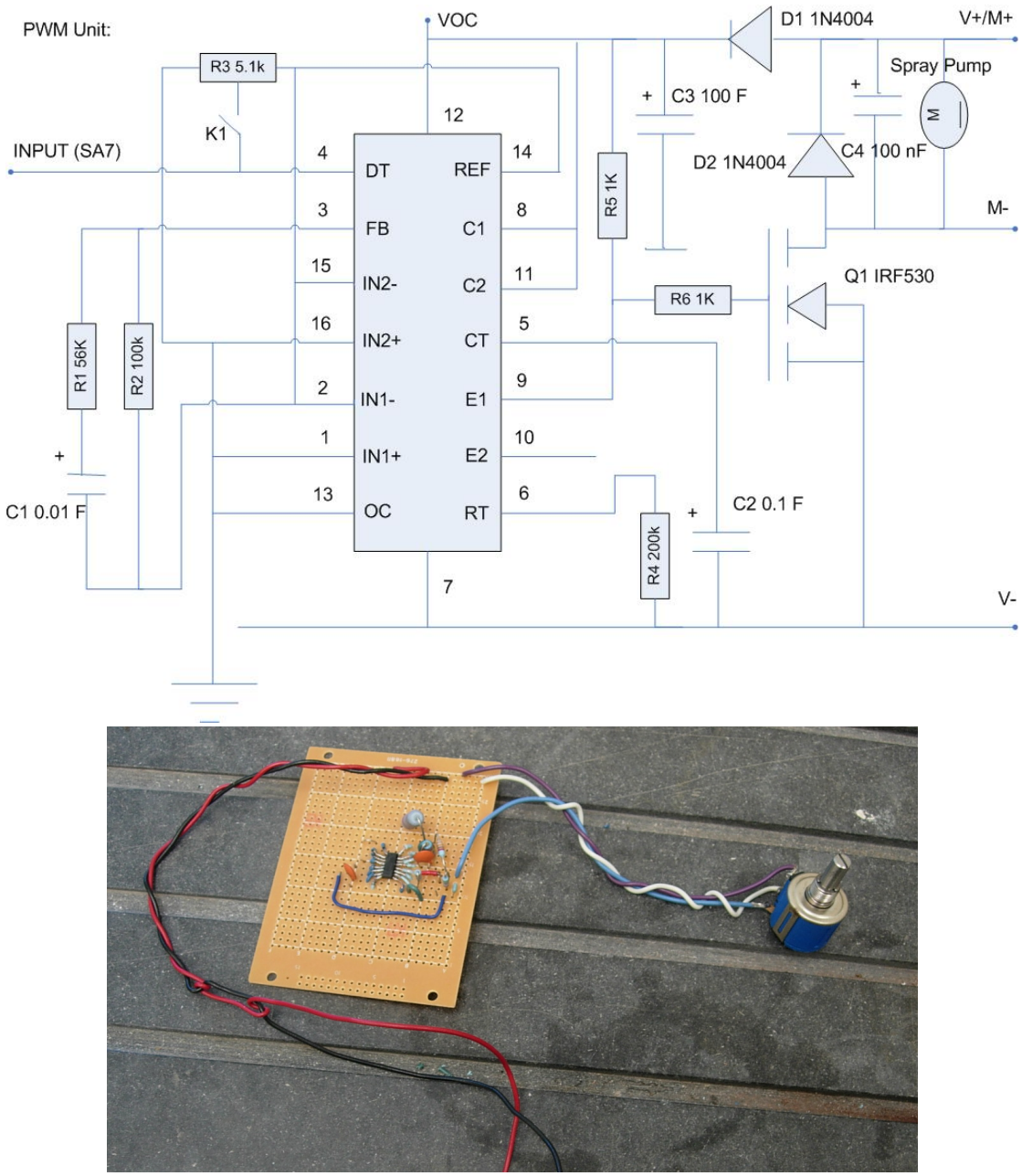

Figure 3. The circuit of PWM pump speed controller.

Based on preliminary field testing, the UAV was anticipated to have a 30-m (100-ft) effective spray swath when spraying at a height of 6 m (20 ft). With an anticipated 30-m swath width and a speed of 2.2 m/s (5 mph), the system will be able to spray 0.4 ha/min (1 acre/min).

Using the nozzle selected for vector control applications, the Micronair ULV–A+ nozzle, the flow rate with BVA oil under varied pump pressures were measured (table 4). Using the measured flow rates, the number of nozzles needed on the spray system was determined for a 30-m (100-ft) swath width, air speed of 2.2 m/s (5 mph) and a spray rate of 0.3 L/ha (4 oz/acre) (table 4). The results indicate that for the targeted spray rate, two, three, and four nozzles are needed, depending on the applied pump voltage.

Conclusions

This research has shown that a spray system was successfully developed for a UAV application platform. The integration of the spray system with the UAV results in an autonomous spray system that can be used for pest management and vector control. This spray system on the UAV is especially good at spraying for vector control (<50-μm droplet size) with a number of Micronair ULV-A+ nozzles (2, 3, and 4) in the PWM control range of spray pump speed. The development of the UAV system with the sprayer has a great potential to enhance pest management over small crop plots or spots within a large crop field to realize highly accurate site-specific application. It is also very promising for vector control in the areas that are not easily accessible by personnel or equipment.

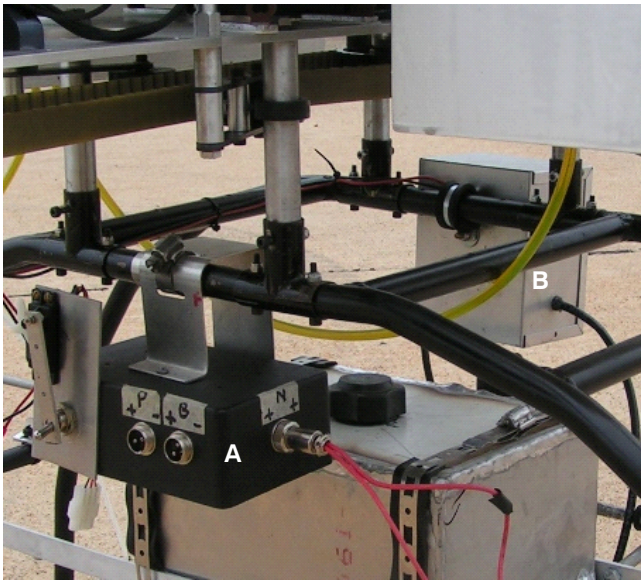

Figure 4. PWM motor control box (A) and pump box (B).

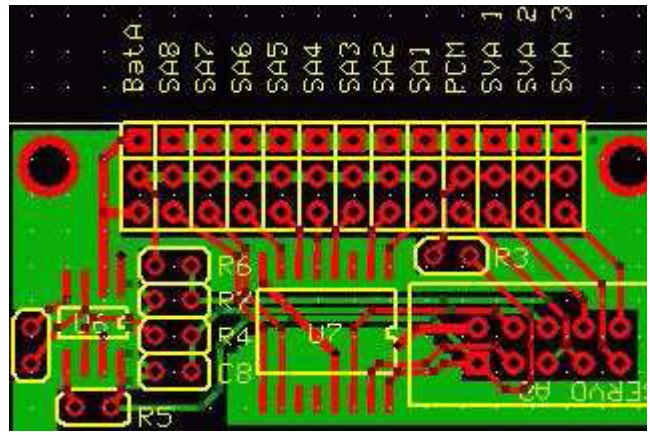

Figure 5. Servo board A diagram.

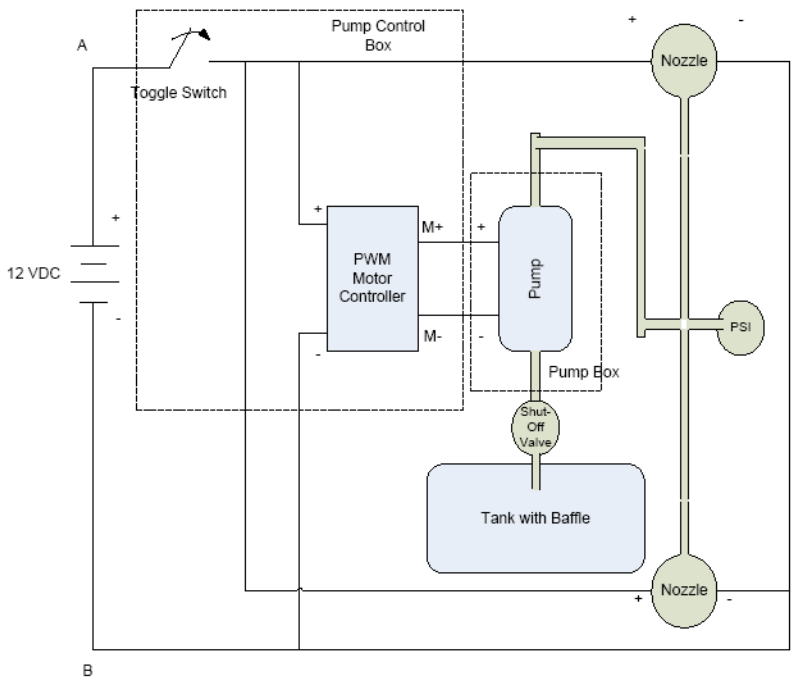

Figure 6. Modular diagram of the spray system.

Table 2. Droplet size measured data of four different nozzles with water

Nozzle	Spray Pressure kPa (PSI)	$D_{V0.1}$ µm ±STD[a]	$D_{V0.5}$ µm ±STD	$D_{V0.9}$ µm ±STD	% Vol <50 µm
Micronair ULV--A+	103.39 (15)	44.59 ±2.11[c][b]	74.26 ±3.17[c]	112.85 ±4.13[c]	14.61 ±2.26[b]
ABABE reference 250067	206.79 (30)	117.73 ±5.37[a]	213.45 ±1.07[a]	335.07 ±8.51[a]	0.62 ±0.19[c]
Orbit misting nozzle	206.79 (30)	70.36 ±9.47[b]	122.52 ±13.66[b]	177.74 ±12.27[b]	3.47 ±1.63[c]
Ecological tech misting nozzle A	275.72 (40)	45.17 ±6.86[c]	82.40 ±5.58[c]	129.03 ±3.50[c]	13.64 ±5.16[b]
Ecological tech misting nozzle B	689.29 (100)	31.98 ±1.88[c]	56.29 ±2.74[d]	82.04 ±6.75[d]	37.11 ±4.31[a]

[a] STD - Standard Deviation
[b] In the same column the quantity is not significantly different from one another with the same letter.

Table 3. Droplet size measured data of the 220 µm orifice Micronair ULV–A+ nozzle with BVA oil.

Pump Voltage (V)	Pump Current (A)	Spray Pressure kPa (PSI)	$D_{V0.1}$ µm ±STD[a]	$D_{V0.5}$ µm ±STD	$D_{V0.9}$ µm ±STD	% Vol <50 µm
10	3	337.75 (49)	35.86 ±3.93[ab][b]	66.26 ±0.98[a]	94.22 ±0.53[ab]	21.07 ±2.04[d]
8	2.7	289.5 (42)	38.77 ±2.14[a]	64.12 ±2.11[a]	90.43 ±2.85[b]	22.57 ±3.17[d]
6	2.2	234.36 (34)	29.3 ±1.23[bc]	46.41 ±1.32[b]	66.13 ±2.66[c]	59.97 ±3.69[c]
4	1.7	165.43 (24)	24.68 ±1.98[c]	40.56 ±0.28[c]	58.56 ±0.34[d]	76.43 ±0.69[b]
2	1.2	89.61 (13)	23.31 ±0.7[c]	36.78 ±1.34[d]	56.3 ±2.36[d]	82.79 ±2.16[a]

[a] STD - Standard Deviation
[b] In the same column the quantity is not significantly different from one another with the same letter.

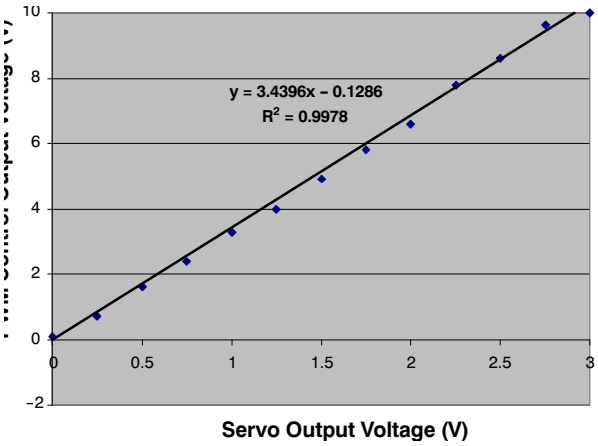

Figure 7. Statistical relationship between servo output voltage and PWM control output voltage.

Table 4. Flow rate measurement and number of nozzles needed.

Pump Voltage (V)	Flow Rate (mL/min)	No. of Nozzles Needed
10	30	4
8	36	3
6	40	3
4	44	3
2	48	2

Acknowledgments

This study was supported in part by a grant from the Deployed War-Fighter Protection (DWFP) Research Program, funded by the U.S. Department of Defense through the Armed Forces Pest Management Board (AFPMB). The authors would also like to thank Mr. Charles Harris for his mechanical work for the nozzle test.

References

Blyenburgh, P. V. 1999. UAVs: An overview. *Air & Space Eur.* 1(5): 43-47.

Crockett, R. J., J. A. Dennett, C. M. Ham, R. D. Nunez, and M. V. Meisch. 2002. Efficacy of Biomist 30:30® and Aqua Reslin® against *Anopheles quadrimaculatus* in Arkansas. *J. American Mosq. Control Assoc.* 18(1): 68-69.

Curtis, G. A., and E. J. Beidler. 1996. Influence of ground ULV droplet spectra on adulticide efficacy for *Aedes taeniorhynchus*. *J. American Mosq. Control Assoc.* 12(2): 368-371.

Eisenbeiss, H. 2004. A mini unmanned aerial vehicle (UAV): System overview and image acquisition. In *Proc. Intl. Workshop on Processing and Visualization using High-Resolution Imagery.* Pitsanulok, Thailand: International Society for Photogrammetry and Remote Sensing, Beijing, China.

Hardin, P. J., and M. W. Jackson. 2005. An unmanned aerial vehicle for rangeland photography. *Range. Ecol. Mgmt.* 58(4): 439-442.

Himel, C. M. 1969. The optimum size for insecticide spray droplets. *J. Econ. Entomol.* 62(4): 919-926.

Hoffmann, W. C., T. W. Walker, D. E. Martin, J. A. B. Barber, T. Gwinn, V. L. Smith, D. Szumlas, Y. Lan, and B. K. Fritz. 2007. Characterization of truck-mounted atomization equipment typically used in vector control. *J. American Mosq. Control Assoc.* 23(3): 321-329.

Hunt, E. R., C. L. Walthall, and C. S. T. Daughtry. 2005. High-resolution multispectral digital photography using unmanned airborne vehicles. In *Proc. of the 20th Biennial Workshop on Aerial Photography, Videography, and High Resolution Digital Imagery for Resource Assessment* . Weslaco, Tex.: American Society for Photogrammetry and Remote Sensing, Bethesda, Md.

Jensen, T., A. Apan, F. R. Young, L. Zeller, and K. Cleminson. 2003. Assessing grain crop attributes using digital imagery acquired from a low-altitude remote controlled aircraft. In *Proc. Spatial Sci. 2003 Conf.* Canberra, Australia: Spatial Sciences Institute, Deakin ACT, Australia.

Johnson, L. F., D. F. Bosch, D. C. Williams, and B. M. Lobitz. 2001. Remote sensing of vineyard management zones: Implications for wine quality. *Appl. Eng. in Agric.* 17(4): 557-560.

Lofgren, C. S., D. W. Anthony, and G. A. Mount. 1973. Size of aerosol droplets impinging on mosquitoes as determined with a scanning electron microscope. *J. Econ. Entomol.* 66(5): 1085-1088.

Matthews, G. A. 1988. *Pesticide Application Methods*, 3rd ed. Singapore: Longman Singapore Publishers.

Miller, J. W. 2005. Report on the development and operation of an UAV for an experiment on unmanned application of pesticides. Youngstown, Ohio: AFRL, USAF.

Yamaha. 2004. Available at: www.yamaha-motor.co.jp/global/business/sky/solution/index.html. Accessed 8 October 2004.