Characterization of In-Swath Spray Deposition for CP-11TT Flat-Fan Nozzles Used in Low-Volume Aerial Application of Crop Production and Protection Materials

Y. Huang, S. J. Thomson

Abstract. *A study was conducted to quantify spray deposit characteristics of the low-drift CP flat-fan nozzle. In the study, CP flat-fan nozzles with selectable tips and swivel angles were evaluated for droplet spectra and coverage using water-sensitive paper (WSP) placed in the spray swath. Three nozzle angles (23°, 38°, and 53° downward from the horizontal) and three application volumes (9.5, 19, and 28.5 L ha^{-1}) were coupled with appropriate flat-fan tips as required by the target application volume. Droplet spectra of the WSP over the spray swath were calculated to produce $D_{V0.1}$, $D_{V0.5}$ (also referred as volume median diameter or VMD), and $D_{V0.9}$. Statistical results showed that higher nozzle spray flow rates resulted in higher percentage spray coverage and that relative humidity at the time of spraying had a significant positive effect on spray coverage ($p = 0.0007$). Average VMD did not differ much between the 38° and 53° downward angles, but average VMD for the 23° angle was 50% higher and more variable than for the 38° and 53° angles across flow rates. Relative span, which is an indication of droplet size ranges, was lower in the field trials than the values indicated by the USDA models at low flow rates. Baseline data obtained in the swath on droplet characteristics can help aerial applicators verify the correct spray tip for a given flow rate and nozzle angle for a desired droplet spectrum and sufficient spray coverage.*

Keywords. *Aerial application, Droplet spectrum model, $D_{V0.5}$, Spray deposition, Spray nozzle, VMD.*

Reduction of off-target spray drift caused by aerial application of pesticides has been recognized as a primary necessity for both cost-effective application and environmental protection. In the application of crop production and protection materials, a complex interaction of variables is involved. The variables include equipment design and configuration, meteorological factors, application parameters, tank mix characteristics, and crop canopy effects. These variables and their interactions significantly influence the on- and off-target deposition and the overall effectiveness of an agricultural application operation (Kirk et al., 1991; Salyani and Cromwell, 1992). In order to achieve an accurate portrayal of application dynamics, the relationships between these variables need to be characterized as accurately as possible. However, complex interactions of so many variables make complete characterization of spray drift difficult to understand (Smith et al., 2000). Droplet size and spray mixture significantly affect the performance of aerial applications (Yates et al., 1976; Bouse et al., 1988; Bird et al., 1996; Spray Drift Task Force, 1997; Lan et al., 2008). Sprays with coarse droplet spectra drift less than sprays with fine droplet spectra, but there is a tradeoff between drift reduction and application efficacy. Nozzles that exhibit a narrow range of droplet sizes are desirable for drift control because fewer "fines" are produced for a given median droplet diameter.

Determining the proper setup of parameters for spray operation is an important aspect of any agricultural application (Wolf et al., 2005). First, the spray nozzle needs to be selected. Operational variables that influence nozzle atomization are then considered. Variations in application rate, application height, nozzle angle and deflection relative to airstream, airplane speed, and spray pressure are also considered.

In this study, the CP flat-fan nozzle was evaluated for coverage characteristics and droplet spectra in the swath using water-sensitive paper (WSP). This study varied the application rate at low volumes and different nozzle angles using the CP-06 swivel. The effects of application flow rate, nozzle angle, and weather variables on the droplet spectrum and percent coverage on WSP were determined statistically. Droplet data from WSP were compared with the output from the USDA droplet spectrum model (www.cpproductsinc.com/aerial/droplet_calc.html) at different application volumes and nozzle angles. Spray patterns in the swath were observed and used to assist with selecting a location for comparison with USDA droplet spectrum model results. The baseline data obtained in the swath on droplet characteristics can help

Submitted for review in September 2010 as manuscript number PM 8211; approved for publication by the Power & Machinery Division of ASABE in November 2011.

Mention of trademark, vendor or proprietary product does not constitute a guarantee or warranty of the product by the USDA and does not imply its approval to the exclusion of other products that may also be suitable.

The authors are **Yanbo Huang, ASABE Member,** Agricultural Engineer, and **Steven J. Thomson, ASABE Member,** Agricultural Engineer, USDA-ARS Jamie Whitten Delta States Research Center, Crop Production Systems Research Unit, Stoneville, Mississippi. **Corresponding author:** Yanbo Huang, USDA-ARS JWDSRC, Crop Production Systems Research Unit, 141 Experiment Station Rd., Stoneville, MS 38776; phone: 662-686-5354; fax: 662-686-5372; e-mail: yanbo.huang@ars.usda.gov.

aerial applicators verify the correct spray tip for a given flow rate and nozzle angle for a desired median droplet diameter and sufficient spray coverage.

Objectives

The objectives of this study were to:

- Evaluate the effects of application rate and nozzle angle relative to the airstream of CP flat-fan nozzles mounted on agricultural aircraft on droplet spectra and spray coverage using WSP.
- Compare field data obtained from the CP nozzles with output data from the USDA droplet spectrum model.

Materials and Methods

Nozzle

CP-11TT flat-fan nozzles (CP Products, Inc., Tempe, Ariz.) were selected for this study because of their availability in a wide range of flow rates. These nozzles have flat-fan tip styles that can be mounted in a turret selector to produce a wide range of droplet sizes. The tips are color-coded for flow rate and click into place with a detent spring and ball. Thirty-one CP-11TT flat-fan nozzles were mounted on the spray booms. Tip sizes 4006, 4012, and 4020 were configured to deliver application rates of 9.5, 19, and 28.5 L ha^{-1}. CP-06 swivels were used with the nozzles to adjust nozzle angle with respect to the airstream in 15° increments. These adjustments are able to create different droplet spectra for specific application needs. This study utilized three different swivel angles: 15°, 30°, and 45°. When added to the default angle of 8° of the CP-11TT nozzle, this gave actual downward angles of 23°, 38°, and 53° from the horizontal.

Spray System

The field test was conducted using an Air Tractor 402B agricultural aircraft (Air Tractor, Inc., Olney, Tex.) with a Satloc Airstar M3 guidance system (Hemisphere GPS, Calgary, British Columbia, Canada). Global positioning, heading, and real-time clock data were recorded and saved during the spray runs and stored in Satloc flash memory during the spray runs. A laser height sensor (LaserTech universal laser sensor, Laser Technology, Inc., Centennial, Colo.), was mounted on the aircraft to measure the actual height of spray release, and logged data were stored in an onboard notebook computer. A weather tracker (Kestrel 4500, Nielsen-Kellerman, Boothwyn, Pa.) was placed adjacent to the test field to record wind speed, wind direction, air temperature, and relative humidity every 2 s at a height of 1.5 m above ground. An instrumented weather station with a datalogger (CR-21X, Campbell Scientific, Logan, Utah), located adjacent to the field, was used as a backup and for comparison with the weather data from the Kestrel 4500. Time clocks from the Kestrel 4500, the notebook PC, and the CR-21X were all synchronized to atomic time. The Satloc system registered a peculiar lead of 12 s over atomic time, first noticed by Thomson et al. (2004). To correct for this error, the Satloc data were offset by 12 s to match the other clock data. The spray solution for the study was water + Induce adjuvant (Helena Chemical Co., Collierville, Tenn.) at a mix rate of 2.5 mL L^{-1} water. An active ingredient was not added for nozzle testing.

Study Layout and Field Testing

The complete field test was conducted on June 18, 2008, in a 6.7 ha bermudagrass field located near the USDA-ARS Stoneville, Mississippi, research station (33° 26′ 28″ N, 90° 53′ 16″ W, and 37 m above mean sea level). The size of the field allowed the aircraft to land nearby, facilitating rapid changing of nozzle tips and spray angles. In-swath deposition of applied material was measured using seven sampling stations spaced evenly 4.6 m apart across the swath (fig. 1). Swath width for flow calculations was set at 18.3 m, and one more sampling station (13.8 m from the center) was set up at each side of the sampling line beyond the swath.

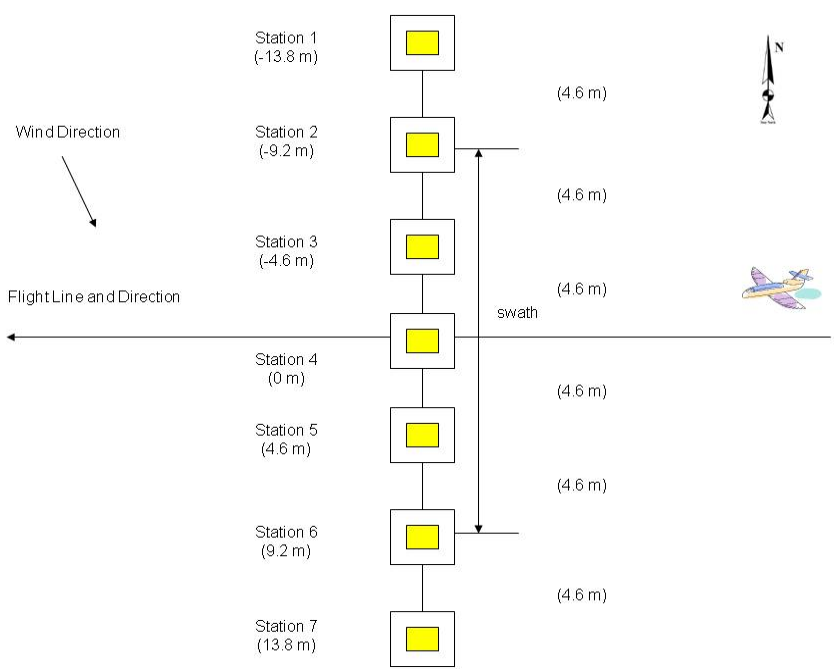

Figure 1. Field test site layout.

After a test run to confirm proper operation of the nozzles, the aircraft was flown east to west down the center line of the swath for the spray runs. Wind direction was variable throughout the test (table 1) but generally had a north to south component. WSP cards were set on each sampling station and collected after each run. For the convenience of data processing, the seven stations were assigned coordinates of -13.8, -9.2, -4.6, 0, 4.6, 9.2, and 13.8 m for stations 1, 2, 3, 4, 5, 6, and 7, respectively.

For the CP nozzle test, 27 passes (3 × 3 × 3) were flown for three flow rates (9.5, 19 and 28.5 L ha^{-1}, using nozzle tips 4006, 4012 and 4020 respectively), three nozzle angles (23°, 38°, and 53°), and three application heights (3.7, 4.9, and 6.1 m). A total of 189 WSP cards were collected (27 passes × 7 stations). Nozzle angles were set and remaining variables were randomized for each run.

Data Processing and Analysis

After the field test, each WSP card was scanned using a camera-based imaging system (Thomson and Lyn, 2011) with SigmaScan 5.0 (Aspire Software International, Ashburn, Va.). The SigmaScan macros output parameters from each of the cards, including total and percentage card area covered by spray deposits, diameter of each droplet, percentage of deposits showing a "compactness" less than 20, and total number of deposits on cards. Compactness is a measure of deposit "roundness," or the perimeter^2/area.

After processing to sort the deposit data and determine cumulative droplet areas for calculation of size parameters, further data analysis and processing were conducted in a QuickBasic (Microsoft Corp., Redmond, Wash.) program. The program was designed to allow screening of droplets below a user-selected compactness threshold and generate droplet spectrum parameters ($D_{V0.1}$, $D_{V0.5}$, and $D_{V0.9}$) before accounting for spread factor. Compactness in this case was set to a value of 22, with 12.57 being a perfectly round droplet. The spread factor equation chosen was the USDA version as used previously by Thomson at al. (2007) and described by Hoffmann and Hewitt (2005):

$$D_D = 0.53549306 \times S_D - 0.000084839 \times S_D^{\,2} \quad (1)$$

where D_D is the droplet diameter, and S_D is the stain diameter.

$D_{V0.1}$, $D_{V0.5}$, and $D_{V0.9}$ are important parameters to describe spray droplet size spectra. $D_{V0.5}$ is the droplet diameter (μm) at which 50% of the spray volume or mass is contained in droplets smaller than this value. $D_{V0.5}$ is also referred as volume median diameter (VMD). The $D_{V0.1}$ and $D_{V0.9}$ values describe the proportion of the spray volume (10% and 90%, respectively) contained in droplets of the specified size or less.

To study the effects of application operational parameters and weather conditions on droplet spectrum and spray coverage from the CP nozzles, trends were analyzed both graphically and statistically using PROC MIXED in SAS 9.13 (SAS Institute, Inc., Cary, N.C.). Operational parameters included nozzle angle, application rate, spray height, and weather variables.

Measured CP nozzle data were compared with the output of the USDA droplet spectrum model. The model requires input of nozzle tip size, nozzle angle, operating pressure (psi), and ground speed (mph) to generate corresponding $D_{V0.1}$, $D_{V0.5}$, and $D_{V0.9}$.

Results

Experiment

Table 1 illustrates application variables and weather data from the CP nozzle tests. The ground speed data were extracted from the Satloc log file. Nominal spray pressure data were obtained visually by the pilot from meter readings onboard the aircraft. Weather data were obtained from the stationary Kestrel 4500 weather tracker system placed in the field at the time of the test. From the table it can be seen that ground speed, spray pressure, and wind speed were quite consistent, but the wind direction varied from the beginning to the end of the test. A simultaneous increase in air temperature and decrease in relative humidity (RH) occurred over the course of the day.

The effect of application variables and weather on total percent spray coverage on the WSP cards was evaluated. A log transformation of percent spray coverage ($p_{coverage}$) was necessary to improve model fitness, based on statistical iterations. The variables spray angle, LLPH (log liter per hectare) flow, and RH showed significant effects on percent spray coverage across all cards ($p < 0.0001$, $p < 0.0001$, $p = 0.0007$, respectively). Interestingly, height of application did not show a significant effect on spray coverage ($p = 0.6289$). The model solution for the three variables is illustrated in figure 2 for the 38° spray angle using artificially generated inputs to indicate the trend:

$$p_{coverage} = \exp(-5.784 + 5.8051 \times \text{LLPH} + 0.02933 \times \text{RH}) \quad (2)$$

The model above (eq. 2) was derived by finding coefficients from the solution to the fixed effects model for $\log(p_{coverage})$ using PROC MIXED. The classification variable was nozzle angle, and significant effects LLPH and RH were included in the model. Model solutions were obtained in SAS at each nozzle angle, and coefficients for the first term of equation 2 were found to be −5.741, −5.784, and −5.998 for nozzle angles of 23°, 38°, and 53°, respectively. The final model for $p_{coverage}$ was obtained by exponentiating both sides of the model derived in SAS. Trends indicated that, as expected, higher flow rates increased spray coverage on cards, and higher relative humidity favored increased deposition. Least-squared means (LSM) estimates for deposition with the 23°, 38°, and 53° angles were 0.6201, 0.6015, and 0.5089, respectively. This indicates that spray deposition coverage was similar for the 23° and 38° angles and lower for the 53° angle.

Variability of VMD when using the 23° nozzle angle was greater than for the 38° and 53° angles (fig. 3). Table 2 illustrates mean VMD values at each angle and target application rate (L ha^{-1}). Figure 3 shows the trend of higher VMD at higher application rate. The lowest average VMD was observed at the 38° nozzle angle (table 2). The average standard deviation of VMD of the smallest angle (23°) was over twice that for VMD at either the 38° or 53° nozzle angles. Of all modeled variables, only nozzle angle ($p = 0.0154$) and flow rate ($p = 0.0247$) showed a significant effect on VMD. Although not significant at the 0.10 level, wind speed ($p = 0.1134$) appeared to have some effect.

Table 1. Application variables and weather data of CP nozzle test on June 18, 2008.

Application Rate (L ha^{-1})	Nozzle Angle (°)	Application Height (m)	Ground Speed (m s^{-1})	Spray Pressure (kPa)	Wind Direction (degrees from true north)	Wind Speed (m s^{-1})	Air Temperature (°C)	Relative Humidity (%)
19	38	3.7	66.6	289.8	94	2.0	23.2	75.7
		4.9	67.5	317.4	73	2.5	23.2	74.1
		6.1	66.8	289.8	79	3.2	23.6	74.2
	53	3.7	65.1	289.8	94	2.6	23.8	70.7
		4.9	65.8	289.8	101	2.2	23.9	70.3
		6.1	65.8	289.8	96	3.0	23.9	68.5
	23	3.7	65.5	289.8	108	2.5	24.8	63.3
		4.9	64.7	289.8	86	2.4	25.8	66.6
		6.1	65.5	289.8	118	2.8	24.8	63.1
9.5	38	3.7	67.6	248.4	80	3.8	25.3	62.1
		4.9	67.0	248.4	128	4.0	25.4	58.1
		6.1	67.1	248.4	83	3.7	25.8	60.6
	53	3.7	66.3	262.2	55	2.9	26.2	56.7
		4.9	65.6	262.2	96	2.5	25.6	56.3
		6.1	65.3	262.2	38	2.3	26.9	58.5
	23	3.7	65.6	262.2	77	2.1	26.5	54.8
		4.9	65.5	262.2	48	3.5	26.1	55.2
		6.1	66.6	262.2	30	2.3	26.3	55
28.5	38	3.7	67.4	262.2	245	3.5	26.6	51.3
		4.9	66.4	262.2	259	2.6	26.6	49.4
		6.1	66.9	262.2	254	3.6	27	49.5
	53	3.7	66.0	262.2	322	3.2	26.7	47.3
		4.9	65.3	262.2	317	3.7	27.4	49.4
		6.1	65.9	262.2	326	1.6	28.7	48.9
	23	3.7	66.5	262.2	298	2.6	27.9	43.2
		4.9	65.9	262.2	329	2.1	28.6	46.4
		6.1	65.9	262.2	327	4.3	27.2	43.7

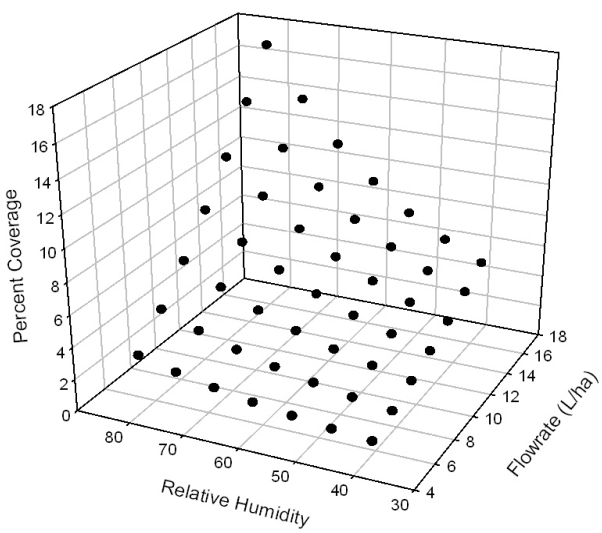

Figure 2. Statistical model output showing the effects of RH and flow rate on percentage spray coverage for 38° spray angle.

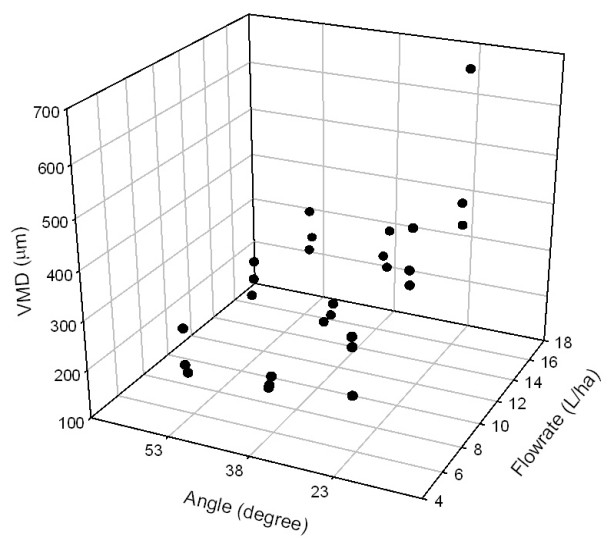

Figure 3. Scatter plot for VMD vs. flow rate at the three nozzle angles.

Comparisons of Droplet Spectra with Output from USDA Droplet Spectrum Models

Table 3 shows the droplet characterization of the CP flat-fan nozzles from the USDA droplet spectrum model under the same conditions as the test on June 18, 2008. Each data point represents a mean value at three altitudes and a slightly different ground speed associated with each run.

Table 2. Mean VMD (µm) as a function of spray angle and target application rate (standard deviations are indicated in parentheses).

Application Rate (L ha^{-1})	Nozzle Angle		
	23°	38°	53°
9.5	294 (93)	207 (46)	218 (69)
19	373 (157)	249 (56)	273 (54)
28.5	415 (145)	266 (79)	264 (67)
Average	360 (132)	240 (60)	252 (63)

Table 3. Droplet characterization of CP 40° flat-fan nozzles from USDA droplet spectrum models. $D_{V0.1}$, VMD, and $D_{V0.9}$ values are means (standard deviations are indicated in parentheses).

Orifice and Application Rate	Angle (°)	$D_{V0.1}$ (μm)	VMD (μm)	$D_{V0.9}$ (μm)
Small orifice, 9.5 L ha^{-1}	38	64 (1.15)	247 (2.65)	384 (2.65)
	53	57 (1.73)	240 (3.61)	372 (4.16)
	23	85 (2.89)	271 (4.04)	419 (5.77)
Large orifice, 19 L ha^{-1}	38	108 (1.53)	263 (0.58)	392 (1.15)
	53	94 (1.73)	252 (1.15)	367 (1.73)
	23	133 (2.31)	288 (2.89)	443 (5.77)
Large orifice, 28.5 L ha^{-1}	38	179 (1.53)	265 (2)	375 (4)
	53	169 (1)	258 (1.15)	359 (1.73)
	23	195 (0)	282 (0.58)	413 (0.58)

Figure 4 illustrates plots of the in-swath percentage area coverage patterns. The 9.5 L ha^{-1} plot indicates that the maximum percentage area coverage occurred at the stations located −4.6, 0, and 4.6 m for nozzle angles of 53°, 23°, and 38°, respectively. Therefore, the center station was used as the comparison point with the model calculation for the 9.5 L ha^{-1} CP nozzle test on that day. The 19 L ha^{-1} plot indicates that the maximum percentage area coverage occurred at the station 4.6 m downwind, so the 4.6 m station was chosen as the comparison point with the model calculation for the 19 L ha^{-1} CP nozzle test on that day. The 28.5 L ha^{-1} plot indicates that the maximum percentage area coverage occurred at the 4.6 m station for nozzle angles of 38° and 53°, and the second highest percentage area coverage happened at the 4.6 m station for 23°. Therefore, the 4.6 m station was again used as the comparison point with the model calculation for the 28.5 L ha^{-1} CP nozzle test on that day.

Figure 5 illustrates differences between the measured droplet characterization for the CP-11TT nozzles and estimations from the USDA droplet spectrum models at different nozzle angles for each application rate corresponding with the test conducted on June 18, 2008. Although WSP can only estimate actual droplet sizes due to field variables not present in the wind tunnel used to derive the models, relative differences in the range of sizes that indicate relative span can present interesting differences. For the 9.5 L ha^{-1} rate, VMD between the model and WSP tracked each other well. However, relative span was not as great as the model indicated when observed from WSP. At 19 L ha^{-1}, a similar pattern emerged, although differences in relative span were not as great overall. Relative span was also observed to be lower than the models indicated for the flat-fan nozzle. This trend was reversed at 28.5 L ha^{-1}, the highest flow rate. $D_{V0.1}$ tracked quite well, but relative span was higher than the modeled result. This was primarily due to the divergence in VMD and $D_{V0.9}$ (observed values being higher). For our experiment at least, the observed relative span of droplet sizes was lower at the two lower application rates. Conversely, the modeled relative span was higher than observed at the two lower application rates.

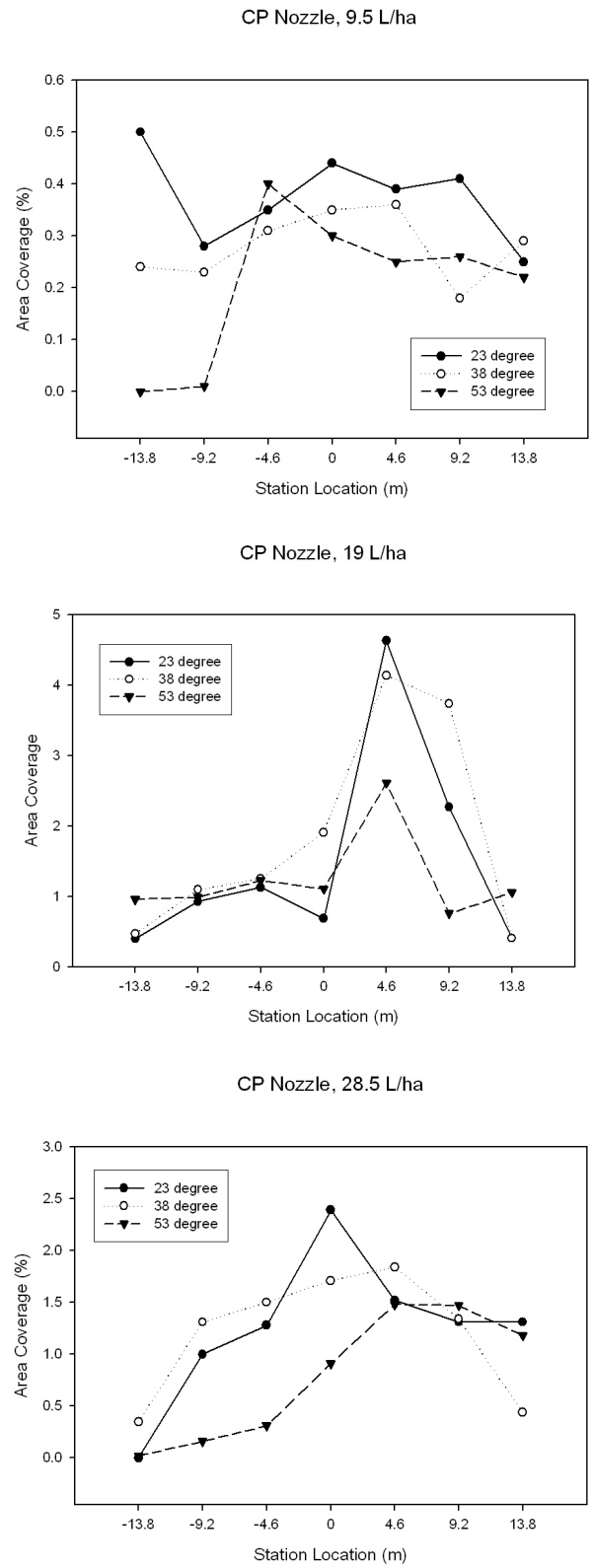

Figure 4. In-swath percentage area coverage patterns of the CP nozzle tests.

Summary and Discussion

The effects of application rate and nozzle angle on spray coverage and droplet spectra were determined for CP flat-fan nozzles mounted on an agricultural aircraft. WSP cards mounted on stands were placed in the spray swath and analyzed for droplet size, droplet size ranges, and spray coverage. Droplet size data obtained from WSP were compared with modeled results from the USDA droplet spectrum models.

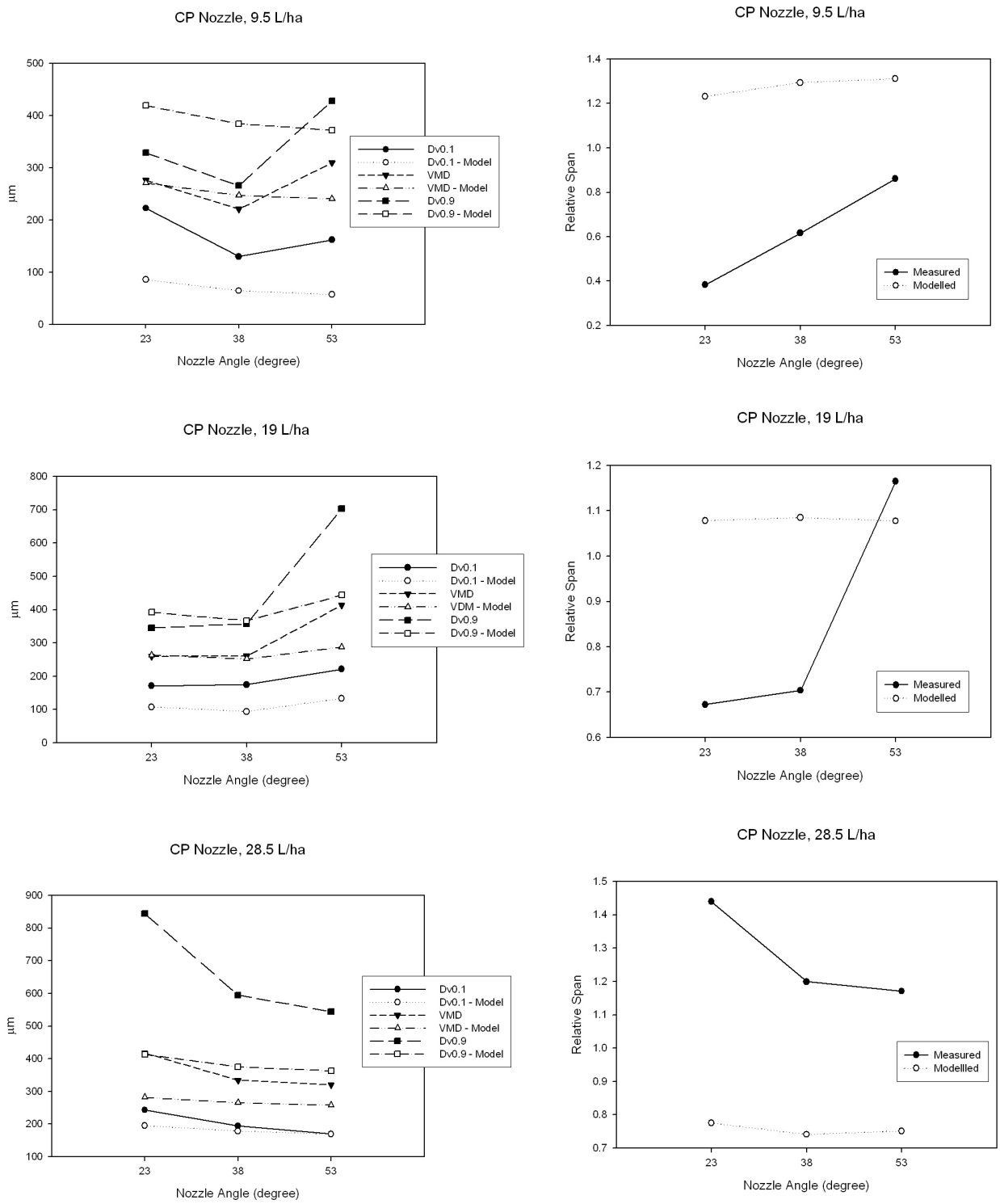

Figure 5. Measured droplet characterization of CP-11TT nozzles compared with the output of the USDA droplet spectrum model with different nozzles at each application rate.

The variables spray angle, log of flow rate, and RH showed significant effects on percent spray coverage. Height of application did not show a significant effect on spray coverage. A model solution of spray coverage as a function of application rate and RH was presented, and model coefficients were determined for each spray angle. By observation of least-squared means, nozzles operated at the 23° and 38° downward angles provided higher coverage and droplet sizes than the 53° angle setting.

Variability of VMD for the 23° nozzle angle was greater than for the 38 and 53° angles across the three target application rates tested, and the VMD averaged 50% higher than the VMD for those angles. Trends indicated higher VMD at higher application rates and lowest average VMD at the 38° nozzle angle. The average standard deviation of VMD for the

smallest angle (23°) was over twice that for the 38° or 53° nozzle angles. Only nozzle angle and flow rate showed significant effects on VMD. The effect of wind speed was not strong, but it had an effect on VMD at the 12% level of significance.

Field results indicated that droplet size parameters were comparable with the results indicated by the USDA droplet spectrum models in some configurations. It should be emphasized again that WSP can only give an estimate of actual droplet size due to controllable and uncontrollable field variables not present in the wind tunnel used to derive the USDA models and that values were obtained from a point location in the swath. However, relative span (an indicator of size range) was observed to be low in both the field and from model predictions. Relative humidity (RH) was found to have a significant effect on spray coverage, and the modeled trend with artificial inputs (fig. 2) indicated that this effect was quite pronounced. This would also influence the field results used for comparison with the USDA models. Although it had a non-linear response, this RH effect translated into about a 100% increase in spray coverage per 10% increase in RH at the highest flow rate. This has strong implications for determining when to spray, as droplets can become much smaller (with a commensurate reduction in coverage) due to evaporation under hot and dry conditions (Ozkan, 2000).

What has not been considered, however, are the effects of RH on droplet stain size as indicated by WSP, as equations that determine stain size (such as eq. 1) do not consider differences in relative humidity (RH). WSP cards located within the canopy of transpiring plants absorb moisture from the air and produce a larger stain (due to the longer time required to absorb the droplet) than dry cards. Since droplet size also influences percent spray coverage on cards, differences in RH could affect both the droplet size and the percent spray coverage. Thomson and Lyn (2011) modeled the effect of RH, along with the effects of spray formulation, air temperature, and droplet volume by adjusting these factors within a temperature and RH controlled environment where WSP were placed. Results indicated a statistically significant effect of RH or about a +0.5%/1% Δ RH influence on stain area as indicated on WSP. Over the ~30% range in RH values in our experiment, this translates to about a 15% difference in droplet area. This difference would account for only a small portion of the overall RH effect (fig. 2), indicating that evaporative losses are the overriding factor and should be considered when deciding on the time of day to spray.

The CP flat-fan nozzles exhibited narrow droplet size ranges (as indicated by the low relative span), and this would allow for smaller median diameters, which are beneficial for efficacy, without a significant increase in fines. Statistical results showed the expected trend of higher flow rates resulting in higher total spray coverage.

Height of application did not significantly affect spray coverage, but there were problems with the data acquisition system running the laser. Some runs indicated no data as a result of loose data connections. A height monitor for the pilot was not in service, so for this analysis, we used target heights and relied on the pilot's expertise to fly at specified altitudes. Assuming the pilot flew accurate runs, one explanation for the lack of significance could be that a spray characteristic of the CP flat-fan nozzle makes it insensitive to differences in application height; this would be a positive result for these nozzles. Based on results from this study, an application rate of 19 L ha^{-1} and a 38° nozzle angle were a favorable configuration for both coverage and consistency of application.

Acknowledgements

Thanks goes to Roger Bright for his outstanding work in organizing and coordinating the field study; Phelesia Foster for her work in water sensitive card preparation, collection, scanning and data generation; David Poythress, the pilot, for his consistent flying over the entire testing period; Earl Franklin for his assistance in operating the trailer truck and airplane refueling system; and our summer student workers for their hard work in placing and collecting samplers in hot weather.

References

Bird, S. L., D. M. Esterly, and S. G. Perry. 1996. Off-target deposition of pesticides from agricultural aerial spray applications. *J. Environ. Qual.* 25(5): 1095-1104.

Bouse, L. F., J. B. Carlton, and P. C. Jank. 1988. Effect of water-soluble polymers on spray droplet size. *Trans. ASAE* 31(6): 1633-1641, 1648.

Hoffmann, W. C., and A. J. Hewitt. 2005. Comparison of three imaging systems for water-sensitive papers. *Applied Eng. in Agric.* 21(6): 961-964.

Kirk, I. W., L. F. Bouse, J. B. Carlton, and E. Franz. 1991. Aerial application parameters influence spray deposition in cotton canopies. ASAE Paper No. AA91007. St. Joseph, Mich.: ASAE.

Lan, Y. W. C. Hoffmann, B. K. Fritz, D. E. Martin, and J. D. Lopez Jr. 2008. Spray drift mitigation with spray mix adjuvants. *Applied Eng. in Agric.* 24(1): 5-10.

Ozkan, H. E. 2000. Reducing spray drift. Bulletin 816-00. Columbus, Ohio: Ohio State University Extension. Available at: http://ohioline.osu.edu/b816/index.html. Accessed 12 October 2011.

Salyani, M., and R. P. Cromwell. 1992. Spray drift from ground and aerial application. *Trans. ASAE* 35(4): 1113-1120.

Smith, D. B., L. E. Bode, and P. D. Gerard. 2000. Predicting ground boom spray drift. *Trans. ASAE* 43(3): 547-553.

Spray Drift Task Force. 1997. A summary of aerial application studies. For more information, contact David R. Johnson at Stewart Agricultural Research Services, Inc., P.O. Box 509, Macon, Missouri 63552.

Thomson, S. J., and M. L. Lyn. 2011. Environmental and spray mixture effects on droplet size represented by water-sensitive paper used in spray studies. *Trans. ASABE* 54(3): 803-807.

Thomson, S. J. L. A. Smith, and R. Sui. 2004. Performance evaluation of low-cost GPS and WAAS-corrected swathing systems on agricultural aircraft using precise position triggering. ASAE Paper No. 041062. St. Joseph, Mich.: ASAE.

Thomson, S. J., L. D. Young, J. R. Bright, P. N. Foster, and D. D. Poythress. 2007. Effects of spray release height and nozzle/atomizer configuration on penetration of spray in a soybean canopy: Preliminary results. Paper No. AA07-008. Washington, D.C.: National Agricultural Aviation Association.

Wolf, R. E., D. S. Bretthauer, and R. Gardisser. 2005. Determining the effect of flat-fan nozzle angle on aerial spray droplet spectra. ASABE Paper No. AA05003. St. Joseph, Mich.: ASABE.

Yates, W. E., N. B. Akesson, and D. E. Bayer. 1976. Effects of spray adjuvants on drift hazards. *Trans. ASAE* 19(1): 41-46.