39

ANNUAL REPORT

1960

SOUTHWEST WATER CONSERVATION LABORATORY
Western Soil and Water Management Research Branch
Soil and Water Conservation Research Division
Agricultural Research Service
United States Department of Agriculture
Tempe, Arizona

ADMINISTRATIVELY CONFIDENTIAL

This report contains unpublished and confidential information concerning work in progress. The contents of this report may not be published or reproduced in any form without the prior consent of the research workers involved.

4777

ANNUAL REPORT - 1960

Southwest Water Conservation Laboratory
Tempe, Arizona

LABORATORY STAFF

Professional:

Dr. H. Bouwer, Agricultural Engineer
Mr. K. J. Brust, Agricultural Engineer
Dr. W. L. Ehrler, Plant Physiologist
Mr. L. J. Erie, Irrigation Engineer
Mr. G. W. Frasier, Agricultural Engineer
Dr. L. J. Fritschen, Soil Scientist
Dr. R. D. Jackson, Soil Scientist
Mr. C. L. Jenson, Agricultural Engineer
Mr. L. E. Myers, Agricultural Engineer - Director
Dr. F. S. Nakayama, Chemist
Mr. R. J. Reginato, Soil Scientist
Mr. R. C. Rice, Agricultural Engineer
Dr. C. H. M. van Bavel, Soil Scientist

Research Assistants:

O. F. French, Engineering Aid
C. W. Kohli, Engineering Aid
J. L. MacIntyre, Physical Science Aid
R. C. McClain, Engineering Draftsman
B. A. Rasnick, Physical Science Technician
C. T. Redman, Agricultural Aid
G. B. Smith, Agricultural Aid

Administrative, Clerical and Maintenance:

E. D. Bell, Machinist
R. C. Berthold, Clerk-Stenographer
E. E. De La Rosa, Janitor
A. V. Figueroa, Laborer
D. S. Fry, Clerk-Stenographer
N. A. Johnson, Clerk
R. C. Klapper, Refrigeration and Air Conditioning Mechanic
R. L. Mendez, Laborer
R. S. Miller, Clerk-Stenographer
M. E. Olson, Clerk-Stenographer
A. M. Schreyer, Clerk-Stenographer

TABLE OF CONTENTS

	Page
Introduction	3
Head Environment of Seepage Meters in Flowing Water	5
Soil Treatment to Reduce Seepage Losses from Canals and Ponds	11
Application of Resistance Network Analysis to Measurement of Seepage, Soil Conductivity and Infiltration	17
Soil Treatment to Reduce Infiltration and Increase Precipitation Runoff	31
Application of Hexadecanol-Octadecanol Monofilms to Small Ponds	40
Dynamic Similarity in Elbow Flow Meters	43
Soil Moisture Conditions and Root Activity Distribution Patterns	57
Soil Moisture Potentials and Water Uptake by Roots	72
Calibration and Evaluation of Net Radiometers	80
Installation and Performance of Electronic Weighing Lysimeters	94
Micrometeorological Data Handling System	113
Development and Testing of Methods to Measure the Moisture Content of the Air in Arid Climates	121
The Measurement of Water Transport in Complex Tubes with Specific Application to the Assessment of Soil-Water Losses by Transpiration	126
Description and Evaluation of the Controlled-Environment Room	135
Utilization of Limited Water Supplies for the Greatest Economic Return in the Irrigation of Cotton	139
Irrigation Schedules for Sorghum Production	153
Consumptive Use of Water by Crops in Arizona	157
Tillage Practices as Related to Production and Infiltration of Water	162
Evaluation of Tillage Factors	165

Page

Development and Performance Test of Lightweight Rate Meter for Neutron Measurement 169

Calibration and Comparative Evaluation of Two Neutron Depth Probes 175

Evaluation of Surface Neutron Probes 181

The Design and Evaluation of a Small, Economical Pressure Cell for the Determination of the Moisture Characteristic of Soil Cores 189

Measuring the Soil-Water Diffusivity of Soil Cores with a Small Pressure Cell 194

The Use of Salty Well Water for the Pre-Planting Irrigation on Silty Clay Soils 202

Service Laboratory 208

Significant Findings by Line Project 211

Papers Prepared or Published During 1960 218

INTRODUCTION

Construction of laboratory buildings was essentially complete at the time the last annual report was written. Staff members have continued to devote time to the processes of designing, obtaining bids and supervising construction of necessary supplemental installations such as curbing, fencing, an irrigation system, a fire detection and alarm system, and the modification of various rooms to fit specific research operations. Although work of this nature is still underway, the laboratory facilities are now in good operating condition.

The work of the Laboratory has been aided substantially by cooperation with numerous individuals and agencies. Valuable cooperation has been received from the University of Arizona, Arizona State University, Salt River Project, Bureau of Reclamation, Bureau of Land Management, Forest Service, Soil Conservation Service, Maricopa County Water Conservation District 1, Arizona State Land Department, Bureau of Indian Affairs, Public Health Service, Nevada State Department of Natural Resource Conservation, and many others. In short, the cooperation extended to the Laboratory by other individuals and agencies could not be better and has provided great encouragement and incentive to the Laboratory staff.

The Laboratory staff has been materially strengthened during 1960 by the addition of thirteen new staff members. Their reporting dates are as follows:

4/11/60	Mr. G. S. Smith, Agricultural Aid
4/25/60	Mrs. D. S. Fry, Clerk-Stenographer

5/ 2/60	Miss B. A. Rasnick, Physical Science Technician
6/12/60	Mr. C. L. Jenson, Agricultural Engineer
6/12/60	Mr. R. C. Rice, Agricultural Engineer
6/13/60	Dr. L. J. Fritschen, Soil Scientist
6/26/60	Dr. R. D. Jackson, Soil Scientist
6/26/60	Dr. W. L. Ehrler, Plant Physiologist
7/ 6/60	Mr. K. J. Brust, Agricultural Engineer
10/ 3/60	Mr. E. D. Bell, Machinist
10/ 3/60	Mrs. R. C. Berthold, Clerk-Stenographer
10/24/60	Mrs. M. E. Olson, Clerk-Stenographer
11/ 9/60	Mr. C. T. Redman, Agricultural Aid

Mrs. L. H. Dean, Clerk-Stenographer, reported for duty on 1/24/60 and transferred to the State Department in Washington, D. C., on 9/10/60.

The Laboratory staff is now at essentially full strength and facilities are essentially completed. Each professional staff member has research projects under way. Some research projects have already been completed and some valuable findings have already been made. The Laboratory is now a going concern.

TITLE: HEAD ENVIRONMENT OF SEEPAGE METERS IN FLOWING WATER

LINE PROJECT: SWC c10-1 CODE NO.: Ariz.-WCL-4

INTRODUCTION:

Previous studies on the mechanics of the flow of water through canal bottom material near and under seepage meters have indicated that small head differences between the seepage meter cup interior and the outside canal can cause appreciable flow rates (leakage flow) into or out of the cup, which are independent of the seepage rate. These flow rates are sometimes a source of considerable error in seepage measurement. Such error inducing head differences can result from high and low pressure areas, adjacent to the cup, caused by distortion of the normal velocity patterns by the presence of the cup. If such pressure differences are not self-compensating, the true average local head around the seepage meter differs from the head indicated by the free water surface in the channel. Consequently, the appropriate reference level for seepage measurement should be the pressure head inside the seepage meter where the leakage flow is zero. For still water (ponds), this pressure head is equal to the free water surface. For flowing water, however, the flow distortion due to the seepage meter causes the zero-leakage flow head to be slightly below the free water surface. This is due to the fact that local pressure increases caused by stagnation at the upstream face of the seepage meter cup are dominated by the pressure reductions due to acceleration at the sides of the cup and separation at the downstream face. Thus, in flowing water, the free water surface must be corrected for velocity induced pressure deviations before it can serve as the reference level, i.e. level of zero-leakage flow, for seepage measurement.

The magnitude of this correction was determined by a model study which is described in the following paragraphs.

PROCEDURE:

The experiment was carried out in a horizontal flume 35 feet long, 19 1/2 inches wide, and 2 feet deep, with a rectangular cross-section. The test section consisted of a recessed water tight box, 4 feet long and 16 inches deep. The box was filled with sand, the surface of the sand being flush with the channel bottom of the flume.

The experiment was conducted in two parts. First, the nature of the pressure distribution in the vicinity of the meter was studied. A model of the seepage meter was mounted on a metal sheet and placed in the test section. A total of twenty pressure taps were installed in the sheet metal representing the channel bottom, and around the circumference of the meter. A twenty-tube manometer was used to measure the pressures. Tests were made varying the water depth and velocity. The velocity was measured with an Ott laboratory current meter. Results showed that the region of pressure reduction around the sides and downstream face of the cup was larger in size than that of the pressure increase at the upstream face of the cup (Figure 1). Consequently, the zero-leakage-flow head inside the cup could be expected to be lower than the free water level in the canal.

The second part of the study involved the measurement of the zero leakage pressure head inside the seepage meter in relation to the free water surface for a variety of conditions. Erosion of the sand was prevented by solidifying the top half inch of the sand with a plastic resin. The resin did not materially alter the porous characteristics of the sand.

Three seepage meter models of different radii were used. Since the walls of the box containing the sand were watertight, the water pressure in the sand was considered equal to the free water surface head. A piezometer connected to a gravel layer at the bottom of the test section was therefore employed to obtain the free water surface elevation. The zero-leakage-pressure in the seepage meter was determined as the equilibrium pressure without external supply or withdrawal of water to or from the meter. The piezometer for measuring the free water surface elevation and a tube from a pressure tap on the seepage cup were connected to a precision manometer capable of measuring a head difference of 0.001 inch.

The following variables were investigated:

1. Velocity of water (V)
2. Depth of water (D)
3. Penetration depth of seepage meter cup (d)
4. Ratio of seepage meter cup radius to channel width (R_c/W)

The velocity was measured 1 1/2 inches from the bottom of the channel at the upstream edge of the test section.

RESULTS AND DISCUSSION:

The results were expressed in terms of Δh (difference between zero leakage pressure head and the free water surface) and plotted as a function of $\frac{V^2}{2g}$ (velocity head) for various water depths. An example of such a graph is shown in Figure 2. Straight line relationships were obtained. The slopes of the straight lines, $\frac{\Delta h}{V^2/2g}$, are equal to twice the reciprocal of the Euler's Number. These slopes are being used for further analysis of the data.

The following trends appeared to exist:

1. $\frac{\Delta h}{V^2/2g}$ decreased with an increase in depth of penetration of the seepage cup.

2. $\frac{\Delta h}{V^2/2g}$ increased with a decrease in water depth.

3. $\frac{\Delta h}{V^2/2g}$ increased with an increase of the ratio of seepage cup diameter to channel width.

SUMMARY AND CONSLUSIONS:

The effect of velocity of water in a channel on the local head environment of seepage meter cups was studied to determine the desired reference pressure head inside the cup for seepage measurement using the falling head technique. The study was carried out in a horizontal flume with a sand bottom test section. Seepage meter models of various radii were used. Other variables were depth of water in channel and depth of penetration of seepage meter.

A study of the local pressure around the seepage model showed that the region of pressure reduction was larger than that of the pressure increase, so that the zero leakage flow head inside the cup is lower than the free water level. The difference between the zero leakage flow head and the free water surface appeared to increase with increasing velocity, with decreasing depth of penetration, with decreasing water depth, and with increasing ratio of seepage cup diameter to channel width. Similitude principles are being used in the analysis of the results.

PERSONNEL: H. Bouwer, L. E. Myers, R. C. Rice.

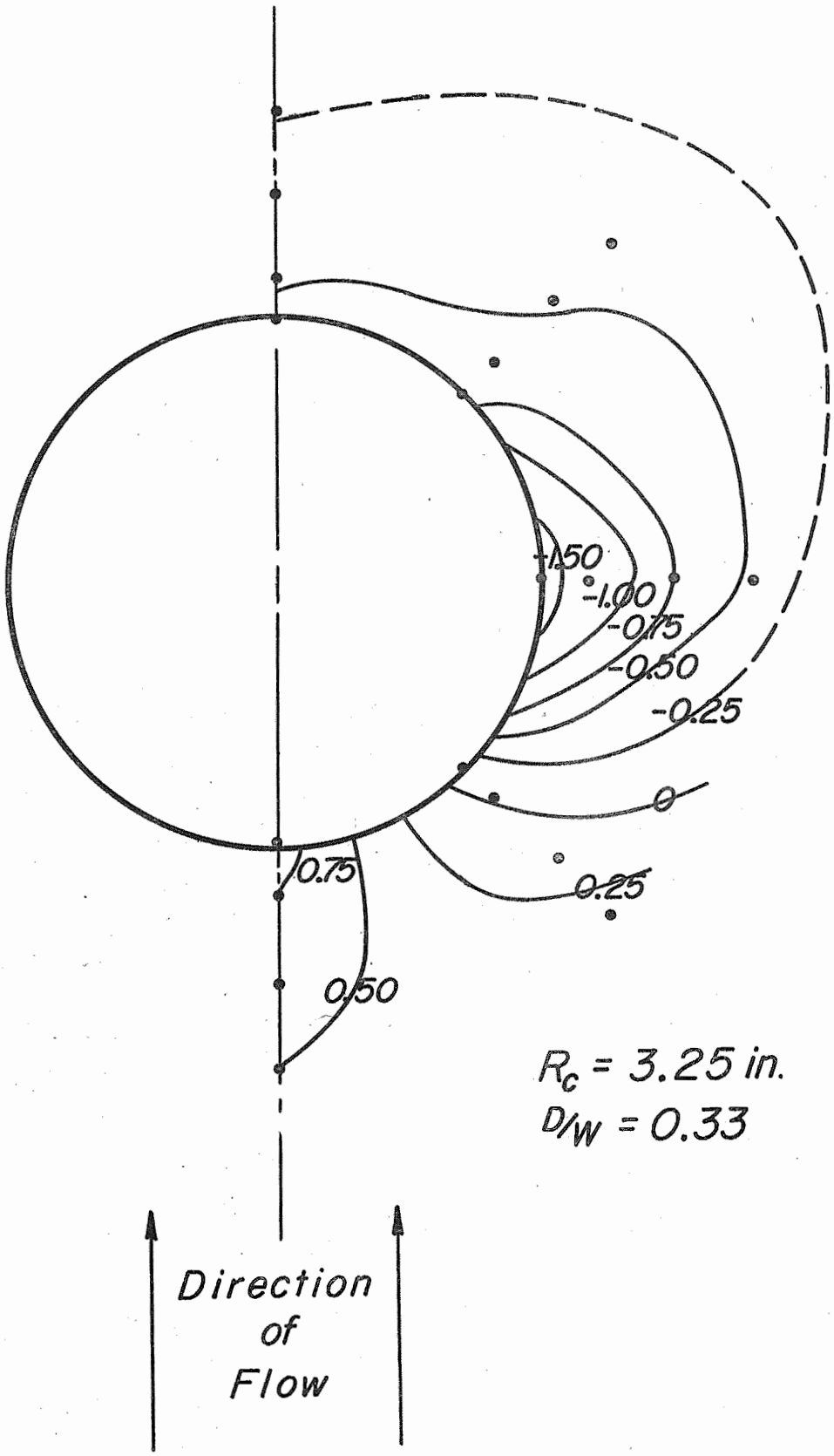

Figure 1. Contours of $\Delta h/(V^2/2g)$ in vicinity of seepage meter cup.

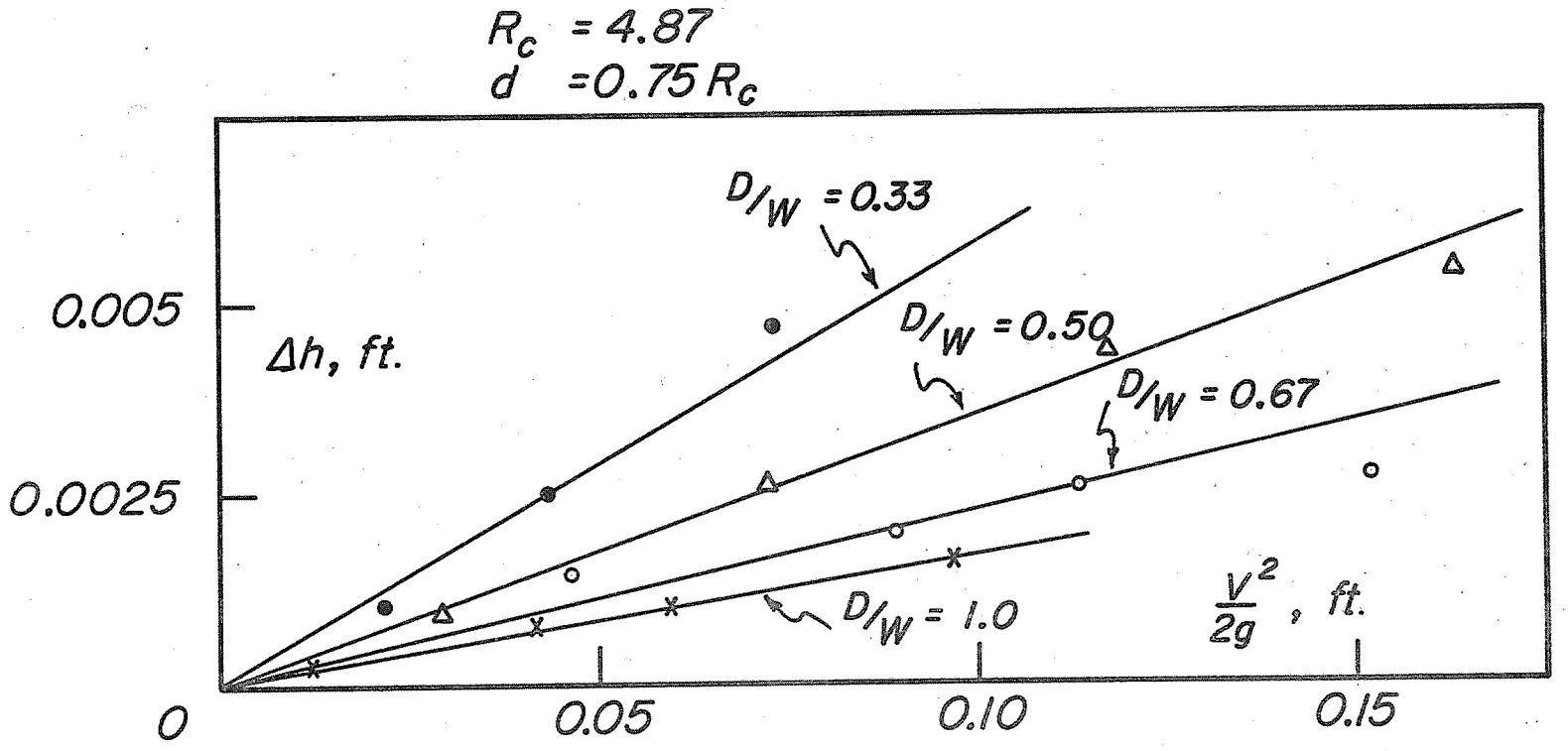

Figure 2. Example of test results in terms of Δh versus $V^2/2g$ for a certain water depth and cup installation.

TITLE: SOIL TREATMENT TO REDUCE SEEPAGE LOSSES FROM CANALS AND PONDS

LINE PROJECT: SWC c10-1 CODE NO.: Ariz.-WCL-8

INTRODUCTION:

A large portion of the water which is diverted or pumped for irrigation never reaches the fields because of seepage losses from canals and ditches. The 1950 United States Census of Agriculture reported that seepage losses from project irrigation canals in the 17 Western States exceeded 20 million acre-feet. Many hundreds of stock ponds constructed on western range lands are ineffective because any water which does collect in them seeps into the porous soils in which the ponds are constructed.

There is an urgent need for low-cost materials and practices which will seal stock ponds and irrigation canals and ditches. The development of low-cost chemical treatments to reduce seepage now appears to be feasible and an important subject for investigation. A project to evaluate promising treatments has been established and is in progress.

PROCEDURE:

Initial screening is done on the basis of information supplied by manufacturers. Materials considered to have promise are then tested by applying them to the surface of various control soils compacted to predetermined densities in test cylinders. The cylinders are then subjected to various constant heads up to 10 feet of water and the seepage reduction calculated by comparison with untreated control cylinders. Water of various quality ranging from distilled to highly saline is used to determine the influence of this factor on the material under test. Depth of penetration into the soil is determined by measuring changes

in hydraulic conductivity at various depths in the soil through head loss measurements on soil columns. Effects of wetting and drying will also be evaluated with the test cylinders. Chemical and physical soil characteristics and water quality factors are considered in the evaluation.

Materials which are successful in laboratory tests are applied to small ponds and canal sections. Effectiveness is determined by pre-treatment and post-treatment seepage measurements made with seepage meters, ponding tests and inflow-outflow methods as appropriate. Observations and measurements of treatment depth of penetration and durability will be made on these field installations with particular reference to alternate wetting and drying, weed growth, ditch cleaning operations, erosion, and other factors as appropriate.

RESULTS AND DISCUSSION:

The information presented here represents a preliminary progress report of partially completed tests which may be subject to change. For this reason the tested materials are identified by code numbers rather than by product name and manufacturer.

Hydrophobic Materials:

A number of hydrophobic materials, including various metallic salts and silicones, were tested for possible use in seepage control. All of them failed when the depth of water standing on the soil surface exceeded 10 centimeters. This finding agrees with reports by Russian scientists who have done similar work. We are presently of the opinion that hydrophobic materials are not a promising means of reducing seepage. New hydrophobic materials will continue to be screened, however, in the hope that we may be proven wrong.

Material D-1:

This is a commercial product intended to disperse the clay fraction of soil and thereby mechanically seal the soil pores. The material was dissolved in distilled water and sprayed on the soil surface in the test cylinders at different application rates. Two test soils have been used to date. One soil was saline, contained 13 percent clay, and had an untreated hydraulic conductivity of about 1.0 inches per hour. The second soil was non-saline, contained 30 percent clay, and had an untreated hydraulic conductivity of about 3.6 inches per hour. An application of D-1 to the soil surface at a rate of 1,300 pounds per acre, the lowest rate tested, completely stopped seepage under heads of 6 feet of water except when channeling occurred. Higher rates of application increased the seepage rate, indicating that the amount applied was excessive and had actually flocculated the soil. The soils were pulverized and packed dry into test cylinders 3 inches in diameter with the compacted soil column 6 inches in length. It is believed that these tests imposed conditions far more severe than actual field conditions. Additional testing will be conducted on "undisturbed" soil cores and in the field. Rates of application will be reduced considerably on the basis of the preliminary findings.

Material S-1:

This is an experimental asphaltic material formulated to permit dispersion in water. The standard test cylinders of a silty sand soil were subjected to a head of 6 feet of untreated canal water until the seepage rate had stabilized. S-1 was added to the water in a concentration of 10 parts per 1,000 and the test continued until the seepage rate

had again essentially stabilized. Results are shown in Figure 1. Material S-1, type B, which was the original formulation, reduced the pre-treatment seepage rate of 1.20 inches per hour to a post-treatment rate of 0.40 inches per hour for a 67 percent seepage rate reduction. Type F, which was formulated for compatibility with hard waters, reduced the pre-treatment seepage rate of 1.08 inches per hour to a post-treatment rate of 0.08 inches per hour for a 93 percent seepage rate reduction.

Field tests of S-1 are now under way. Here again it is believed that the preliminary laboratory tests were considerably more severe than actual field conditions. Additional laboratory testing is being conducted relative to effect of concentration, depth of penetration, effect of soil texture, and related pretinent factors.

Material H-1:

This is a commercial material designed to reduce seepage through a hydrophilic reaction. Initial laboratory tests by other workers have not produced positive results but field trials have consistantly reduced seepage rates by about 60 percent under certain site conditions. We have made field measurements which confirm other field trials. There is a strong possibility that previous laboratory tests did not duplicate field conditions. Laboratory tests designed to simulate field conditions are now under way and will be coordinated with additional field testing. Questions relative to depth of penetration and the effect of alternate wetting and drying are of particular concern.

SUMMARY AND CONCLUSIONS:

Several materials have been tested relative to their possible use for reducing seepage losses. These are materials which can be sprayed

on the soil surface or dispersed in the water in the structure from which seepages losses are occurring. Preliminary testing has produced the following indications.

1. Hydrophobic, or water repellent, materials appear to offer little promise for reducing seepage losses.
2. A clay disperant sprayed on the surface of a soil containing 13 percent clay completely stopped seepage under severe conditions in which a 6 foot head of water was dissipated through a soil core only 0.5 foot long.
3. An asphalt dispersed in the applied water reduced seepage rates by 93 percent in a silty sand soil under sever conditions in which a 6 foot head of water was dissipated through a soil core only 0.5 foot long.
4. A commercial product has reduced seepage rates by 60 percent in field trials on soils containing over 30 percent sand by weight.

These preliminary results indicate highly favorable prospects for the development of low-cost treatments to reduce seepage losses. The major problem will be the possibility of treatment destruction by cleaning operations, by alternate wetting and drying, or by cracking of the treated soil.

PERSONNEL: L. E. Myers, C. L. Jenson, G. W. Frasier

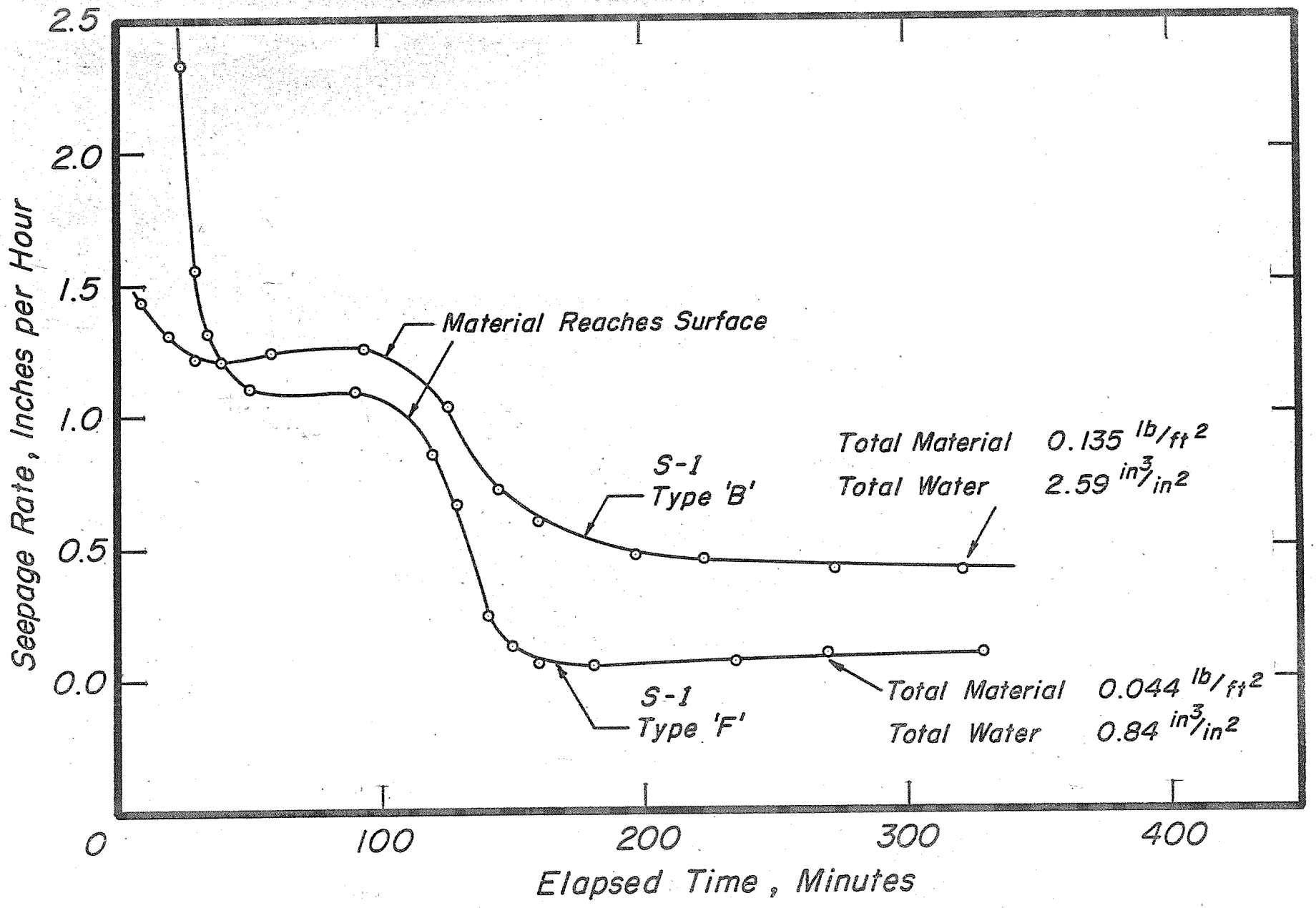

Figure 1. Effect of dispersed asphaltic material S-1 on seepage through a fine sand soil in standard test cylinders under a six-foot head of water.

TITLE: APPLICATION OF RESISTANCE NETWORK ANALYSES TO MEASUREMENT OF SEEPAGE, SOIL CONDUCTIVITY, AND INFILTRATION

LINE PROJECT: SWC c10-1 and SWC c13-6

INTRODUCTION:

Although cylindrical or cup-type seepage meters (Figure 1B) are in principle convenient devices for measuring local canal seepage rates, results have often been erratic and the need for improved techniques has been stressed by a number of investigators. Soil disturbance due to placement of the meter in the bottom material is minimized by the use of the modified Nevada seepage meter, which has a completely removable lid. This leaves the pressure head inside the seepage meter and the corresponding flow from the meter as the only other factors which may constitute a source of error in the seepage measurement. Previous methods consisted of maintaining a head inside the seepage meter equal to the water surface of the canal and determining the outflow from the cup as a direct measure of the seepage. Simultaneous maintenance of a pressure head inside the cup equal to the canal water surface and measurement of the flow into the cup are, however, difficult to carry out in practice. It can be shown that small but consistent head differences between the seepage meter and the canal can cause the seepage as calculated from the meter outflow to be in considerable error. Therefore, a new technique was developed which utilizes a variable head and which, in addition to the seepage, also yields the hydraulic conductivity of the canal bottom material.

The technique utilizes dimensionless parameters, called flow factors, which were developed by resistance network analog. These flow factors describe the flow rate between two bodies of water above a saturated soil, separated by a cylinder penetrating the soil, due to different water levels

or pressure heads inside and outside the cylinder (Figure 1A). Application of these flow factors was also made in the development of a double-tube method (Figure 1C) for measuring hydraulic conductivity of soil in situ above a water table. At present, satisfactory methods for measuring hydraulic conductivity above the water table are not available.

The flow factors were also used to estimate the error in infiltration measurement with buffered cylinders due to unequal water levels in cylinder and buffer. Little information regarding this error is presently available and the need for equal water levels in cylinder and buffer is not clearly understood.

PROCEDURE:

A description of the resistance network analog, which was operational in June 1960, is presented in the 1959 Annual Report.

To generalize the results of the analog analyses, a dimensionless parameter, called the flow factor F_f, was introduced. This factor essentially expresses the volume rate of flow Q_H per unit cross-sectional area of the cylinder, per unit hydraulic conductivity K of the soil, and per unit ratio of the water level difference H to the cylinder radius R_c. In formula, the factor F_f is expressed as

$$F_f = \frac{Q_H}{\pi K H R_c} \tag{1}$$

Assuming a uniform K, the flow factor is a function of the geometry of the flow sytem only, i.e. radius and depth of penetration of the cylinder and depth D to impermeable layer. In addition to soil underlain by impermeable material, the condition of soil underlain by much more permeable material at depths D_p was also included in the analyses. The results are

shown in figures 2 and 3, which show that F_f changes very little with D or D_p if D or D_p has reached a value of approximately $2R_c$. Consequently, if the distance of the material of much higher or much lower conductivity is more than $2R_c$ below the soil-water interface, the soil can be considered as of uniform conductivity.

Under field conditions, the leakage flow due to different water levels occurs in conjunction with flow due to seepage or infiltration into the soil. The net flow from or to the cylinder is, therefore, the resultant of the flow component due to leakage and the component due to seepage or infiltration. This resultant flow is the algebraic sum of the individual components. If the water in the cylinder is lower than that outside the cylinder, the net flow entering the soil from the cylinder is the intake component minus the leakage component. At a certain head difference, the leakage component is equal but opposite the intake component, so that the net flow leaving the cylinder is zero. This head difference is called the balanced-flow differential head H_b. The balanced flow level in the cylinder is the equilibrium level which will establish itself when there is no external supply or withdrawal of water to or from the cylinder and the water level outside the cylinder is kept constant.

The following sections will briefly discuss how leakage flow and flow factors (Figures 2 and 3) can be used in a number of measurement techniques dealing with canal seepage, hydraulic conductivity of soil, and infiltration rates. For more detailed discussions, reference is made to the various articles in press relative to these subjects (Laboratory Publication Nos. 17, 22, 26).

Results and Discussion:

I. Canal Seepage Measurement with Seepage Meters

The variable head technique for seepage meters consists essentially of raising the water level in a reservoir connected to the seepage meter cup an inch or so above the water surface of the canal and measuring the subsequent rate of fall of the water level in this reservoir. The seepage rate is then calculated as:

$$I_s = \frac{2.3\ H_b\ R_v^2}{R_c^2\ t} \log \frac{H_o - H_b}{H_t - H_b} \qquad (2)$$

where I_s = seepage rate (length/time)

R_v = radius of reservoir in which falling head is measured

R_c = radius of seepage meter cup

t = time elapsed since first water level reading in reservoir was taken

H_o = vertical distance between water level in reservoir and water surface in canal at $t = 0$

H_t = vertical distance between water level in reservoir and water surface in canal at time t

H_b = balanced-flow differential head

The factor H_b may be directly measured in the field, or, if a long period of time is required for the water level in the reservoir to reach the balanced flow level, H_b may be determined by extrapolation of H to $t = \infty$ or as the intersect of the H-axis of the best-fitting straight line in a plot of graphically determined $\frac{dH}{dt}$ - values against H.

The ratio $\frac{1}{t} \log \frac{H_o - H_b}{H_t - H_b}$ in equation (2) is determined as the slope of the best fitting straight line in a plot of $\frac{H_o - H_b}{H_t - H_b}$ versus t on semi-logarithmic paper.

The derivation of equation (2) is based on the assumption that the seepage component is not affected by small pressure-head changes inside the seepage meter. This assumption is valid if I_s is numerically not much larger than K of the bottom material.

After calculation of I_s with equation (2), K of the bottom material can be computed as

$$K = \frac{R_c \, I_s}{F_f \, H_b} \tag{3}$$

where F_f is determined from the appropriate figure 2 or 3 for the seepage meter geometry in question.

Equation (2) was checked with the analog by comparing imposed "seepage" rates to the "seepage" rates determined with a simulated falling "head" technique. The results were:

Imposed "seepage" rates:	Calculated "seepage" with eq. (2) from analog data:
0.100 K	0.096 K
0.400 K	0.400 K
1.39 K	1.33 K

Equation (2) was also checked with a sandbox model, where seepage rates calculated from outflow data were compared with seepage rates calculated from falling level measurements in a 22.8 cm cylinder placed in the center of the 90 x 90 cm box. The following results were obtained:

Seepage calculated from outflow:	Seepage calculated with eq. (2):
153 cm^3/min.	134 cm^2/min.
213	195
370	350

Both analog and sand model studies appeared to give good agreement

between known seepage rates and the seepage calculated with equation (2).

Field equipment for practical application of the variable head technique has been constructed, using an electric probe for measuring the rate of fall of the water level in the reservoir. The equipment has been successfully tested at various locations in the Salt River Valley.

II. Measurement of Hydraulic Conductivity Above a Water Table With a Doubletube Installation

A method for measuring saturated hydraulic conductivity of soil in situ above a water table was developed. The field installation consists of two concentric tubes placed in an augerhole (Figure 1C). The bottom of the hole is covered with sand or gravel to reduce puddling. Water is added to both tubes and constant equal levels in the tubes are maintained to saturate the soil below the bottom of the augerhole. Some time during this saturation process, the inner tube is pushed down to penetrate the soil a certain distance d. Since the curves in Figures 2 and 3 become almost horizontal when $D = 2R_c$, the depth of artifical soil saturation does not have to exceed $2 R_c$. It is difficult to predict at what time saturation has reached this depth. Consistency in the results of periodic measurement is the best indication that saturation has progressed to sufficient depth. The field measurements consist essentially of measuring the rate of change of the water level in the inner tube after the level has been raised or lowered a certain distance while keeping the water level in the outer tube constant. The factor K is then calculated by means of the flow factors in Figure 2 or 3.

Analyses with the network analog showed that the approximate size of the soil sample involved in the K-determination is a cylinder with a

diameter and height equal to the diameter of the inner tube. Network analyses further showed that the outer tube must have a diameter of at least 1.7 times the diameter of the inner tube in order for the results to be independent of the actual diameter and the depth of penetration of the outer tube.

The outflow from the inner tube is the resultant of the flow due intake by the soil and the leakage flow due to a water level difference H in tubes. For K-determination, it is necessary to isolate, for a given H, the leakage flow from the net flow. The following two methods were developed to accomplish this:

1. This method is based on the assumption that the intake flow component from the inner tube is the same at the balanced flow level ($H = H_b$) as it is when the level in the inner tube equals that in the outer tube ($H = 0$). The method is, therefore, only applicable to relatively small H_b-values, for instance not larger than one tenth the height of the constant water level in the outer tube above the bottom of the augerhole. The field procedure consists of raising or lowering the water level in the inner tube above or below the balanced flow level and measuring the subsequent rate of fall or rise of this level while keeping the level in the outer tube constant. The factor K is then calculated as

$$K = \frac{2.3\ R_v^2}{R_c\ F_f\ t} \log \frac{H_o - H_b}{H_t - H_b} \qquad (4)$$

where R_v is the radius of the standpipe connected to the inner tube (Figure 1C) and $\frac{1}{t} \log \frac{H_o - H_b}{H_t - H_b}$ is the slope of the best fitting straight line in a plot of $(H_o - H_b)/(H_t - H_b)$ versus t on semilog paper.

2. If H_b is more than one-tenth the water depth in the tubes, the following procedure is used:

a. Starting with equal water levels in both tubes, the water supply to the inner tube is stopped. The rate of drop of the water surface in the inner tube is then measured while the level in the outer tube is kept constant. A plot of H versus t is constructed (curve 1) with H on the vertical axis.

b. The water level in the inner tube is brought back to the original level, i.e. equal to the water level in the outer tube. The rate of fall of the water level in the inner tube is now measured while continuously adjusting the water level in the outer tube so that the latter is equal to the level in the inner tube at all times during these measurements. This is done by means of the valve at the bottom of the standpipe on the outer tube (Figure 1C). The values of H and t are plotted (curve 2) on the same graph as curve 1.

c. Ignoring the effect of the different head conditions on the geometry of the intake flow systems, the difference between curves 1 and 2 is due to the flow component Q_H. The vertical distance ΔH_t between the two curves at time t can therefore be expressed as

$$\Delta H_t = \int_0^t \frac{Q_H}{\pi R_v^2} dt$$

Substituting $Q_H = \pi KHR_c F_f$ in this equation and solving for K gives

$$K = \frac{\Delta H_t R_v^2}{F_f R_c} \frac{1}{\int_0^t Hdt} \tag{5}$$

The integral in equation (5) is determined as the area under curve 1 between t = 0 and t where ΔH_t is measured. The factors R_c and R_v are known for the particular installation and F_f is determined from figure 2 or 3 so that K can be calculated.

Equation (4) was checked in a sand model study, where two concentric cylinders with diameters of 15 cm and 22.8 cm, respectively, were placed in sand with a known conductivity of 3.53 cm/min. The conductivity calculated with equation (4) from falling head measurements in the inner cylinder was 3.47 cm/min, which is excellent agreement.

III. Theoretical Effect of Unequal Water Levels on the Infiltration Rate Determined With Buffered Cylinder Infiltrometers

If, for buffered cylinder infiltrometer installations, the water levels in cylinder and buffer are not the same, the outflow from the cylinder is again the resultant of the flow component due to intake and the component due to leakage and the intake rate computed from the rate of outflow is in error. It can be shown that this error is not a constant, but approaches a maximum as the infiltration reaches the final stages. The following equation was derived to calculate this maximum error:

$$E = \frac{F_f H}{G R_c} 100 \tag{6}$$

where E is the maximum error in per cent, H is the water level difference between cylinder and buffer, G is the intake gradient (intake rate divided by K) and R_c is the radius of the cylinder. If, for example, the

water level in the cylinder is 7.6 cm higher than in the buffer, the diameter of the cylinder is 30.5 cm, and the depth of penetration of the cylinder is 15.2 cm, the outflow from the cylinder would overestimate the intake rate by 11% if G = 3, by 36% if G = 1, and by 108% if G = 0.3 (F_f-values taken from Figure 2 for $D \gg 2R_c$). Thus the error due to different water levels can be quite large, so that it is important to maintain equal water levels in cylinder and buffer.

SUMMARY:

The flow between two bodies of water above a soil-water interface, separated by a cylinder penetrating the soil a certain distance, due to different water levels inside and outside the cylinder, was analysed by resistance network analog. Dimensionless parameters (flow factors) were developed to characterize the flow systems in relation to geometry and conductivity conditions.

Based on these flow factors, a method was developed to determine both the seepage rate and the hydraulic conductivity of reservoir or channel bottoms from measurements using cup-type devices and a falling head technique. The latter eliminated the need for simultaneous maintenance of the free water surface head, inside the seepage meter cup and measurement of corresponding flow from the seepage cup. This is difficult to achieve in practice and failure to maintain the desired head inside the cup can be a source of considerable error.

Further use of the flow factors was made in the development of a method for measuring hydraulic conductivity of soil in situ for initially unsaturated soil (i.e. above a water table). The field installation consists essentially of two concentric tubes placed in an augerhole. The

conductivity is calculated from rate of change of water level measurements in the inner tube due to flow between inner and outer tube through the soil below the bottom of the augerhole after this soil has been artificially saturated by maintaining water in both tubes for some time.

The equations for measuring seepage and bottom conductivity with the variable-head seepage meter technique and for determining hydraulic conductivity of soil above a water table were checked with sandbox model studies. Excellent agreement was obtained between known seepage and conductivity and the seepage and conductivity calculated with the equations containing the flow factors.

In conclusion, use of the flow factors was made to estimate the maximum error in infiltration measurement with buffered cylinder infiltrometers due to unequal water level in cylinders and buffer. Depending on the infiltration gradient, this error can be quite large and can easily approach the magnitude of final infiltration rates. It is, therefore, important that the water surface in cylinder and buffer be maintained at equal level during the infiltration measurement.

PERSONNEL: H. Bouwer

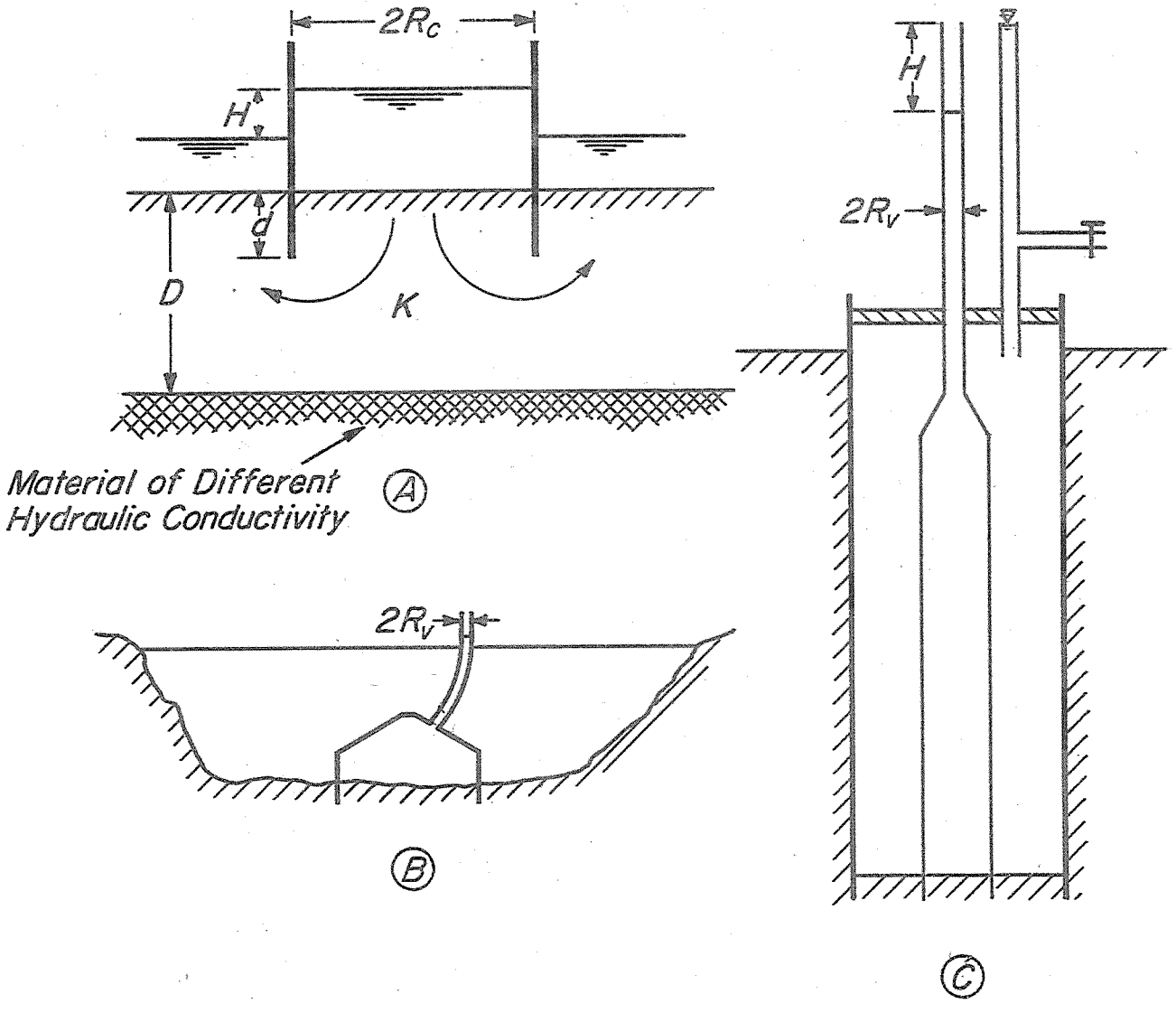

Figure 1. Geometry and symbols of cylinder in soil (A), seepage meter cup in canal (B), and double-tube installation (C).

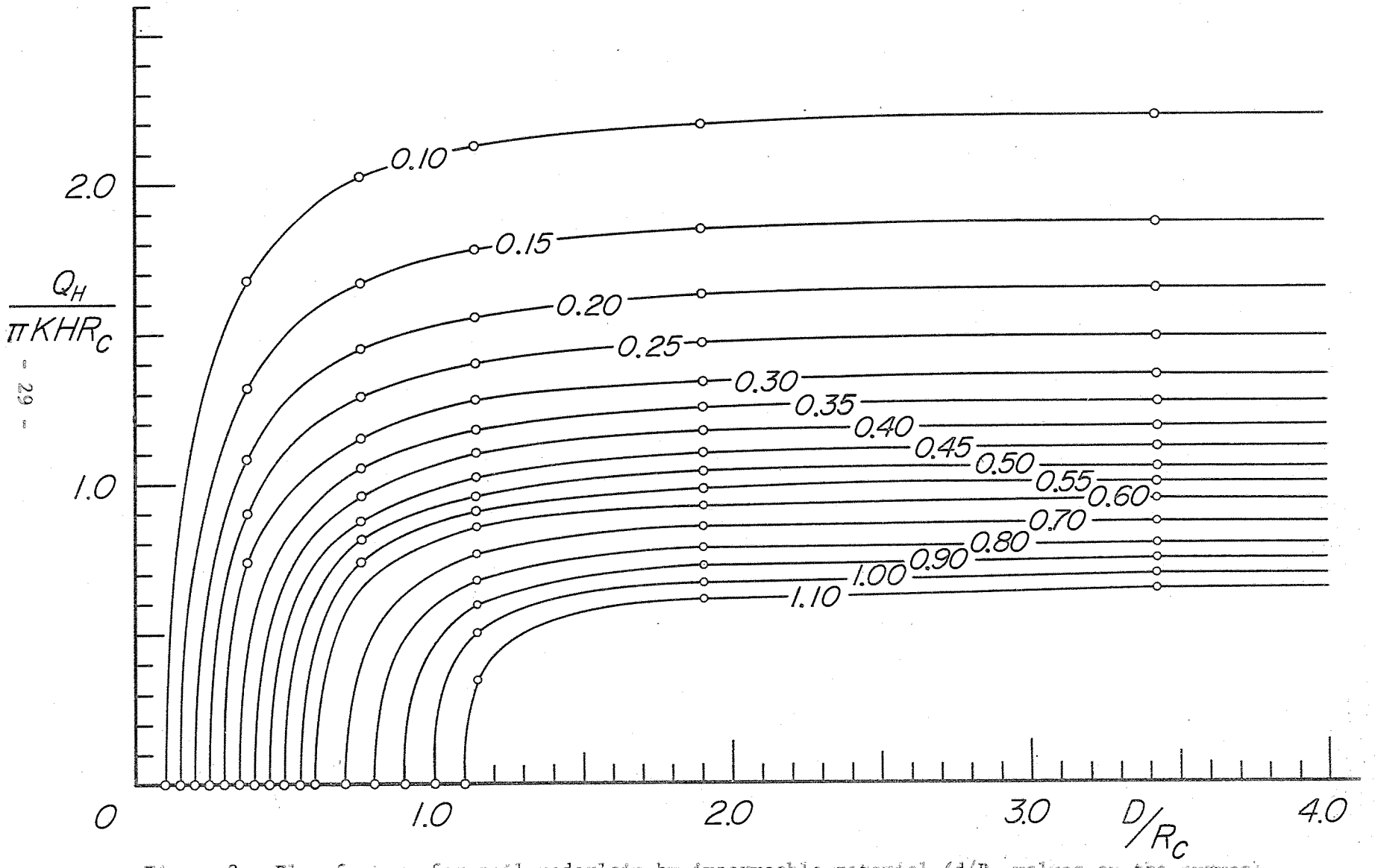

Figure 2. Flow factors for soil underlain by impermeable material (d/R_c-values on the curves).

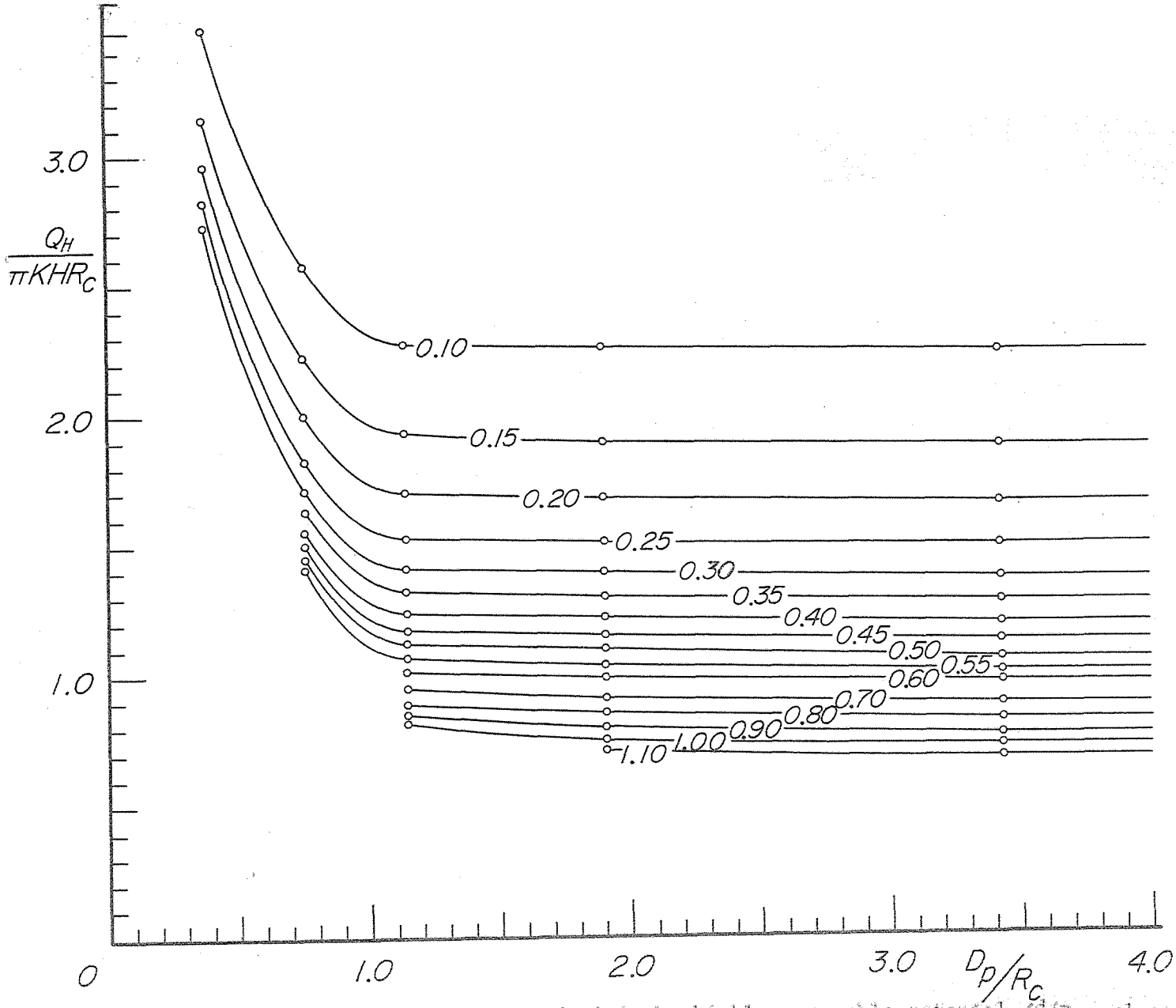

Figure 3. Flow factors for soil underlain by highly permeable material (d/R values on curves)

Annual Report of the U.S. Water Conservation Laboratory

TITLE: SOIL TREATMENT TO REDUCE INFILTRATION AND INCREASE PRECIPITATION RUNOFF

LINE PROJECT: SWC c10-3, SWC c17-2 CODE NO: Ariz.-WCL-7

INTRODUCTION:

Badly needed stockponds cannot presently be constructed in many western rangeland areas because porous soils soak up the precipitation and there is insufficient runoff for storage in the ponds. Many ranchers now resort to construction of deep wells and windmill pumps or to hauling water at high cost. The common result is an inadequate number of widely spaced, poorly located watering sites with over-grazing near the sites and poor use of forage between sites.

Progress had been made in the development of commercial materials which offer promise for low-cost waterproofing of soil surfaces. Such materials have been developed for other purposes, however, and must be evaluated as soil treatments. Although erosion could be increased by indiscriminate waterproofing of soil surfaces, this problem does not appear insurmountable.

PROCEDURE:

Initial screening is done on the basis of information furnished by the manufacturers. Preliminary laboratory testing is done with simple infiltration cylinders, containing a soil column 3 inches in diameter and 5 inches deep, in which the surface of a standardized soil is treated with the material under test and then is subjected to a low, constant head of water, initially 1/2 inch. Materials which waterproof soil in the cylinders are then tested by application to the surface of soil in 30 by 30 inch square by 2 inch deep trays. These trays are subjected to artificial precipitation, wetting and drying cycles, and weathering. The

artificial precipitation is applied with commercial spray nozzles which do not duplicate natural rainfall but do provide a measured, uniform application to test the efficiency of the treatment relative to percentage runoff. Treatment effectiveness is measured by comparing measured runoff with measured precipitation applied. Successful tray treatments are then tested in the field.

Initial field testing is done on 5 by 20 foot plots, installed at various field locations, which are subject to natural hazards such as damage by weeds and insects and deterioration due to winds and solar radiation. These plot treatments are tested by applying artificial precipitation and comparing measured runoff with measured application. Natural precipitation is caught in storage tanks and is compared to precipitation measured by recording rain gages.

Full scale catchment areas will be installed above small storage reservoirs which will be lined whenever possible. Treatments will be selected on the basis of plot trials. Effectiveness will be evaluated on the basis of water collected versus precipitation measurements.

RESULTS AND DISCUSSION:

The information presented here consists of incomplete preliminary findings, subject to change as additional tests are made. For this reason the materials are identified by code numbers rather than by product name and manufacturer. Test results and discussion for materials tested are as follows, with the exception of materials which failed completely.

Material S-1

This is an experimental asphaltic emulsion designed to give improved penetration and bonding to soil. The manufacturer's tests

showed penetration up to one inch when sprayed on wet soil. Maximum penetration we obtained was about 1/4 inch when sprayed on dry soil, with little penetration in wet soil. This discrepancy is being investigated with the manufacturer. Bonding to soil has been excellent and one-foot square test panels exposed to Phoenix weather since April 1960 have shown no deterioration to date. Loamy sand soil was completely waterproofed in laboratory cylinder tests with applications as low as 0.05 pounds per square foot. This rate of application failed to completely waterproof soil when applied to the test trays and higher application rates have not yet been tested. Depth of penetration has an influence on the relationship between rate of application and the degree of waterproofing. We have reservations concerning the durability of this treatment under freezing conditions where water has collected under the film and this will be checked. Erosion resistance was good.

Material S-2

This is a water soluble plastic which forms an insoluble material upon reaction with a catalyst. Reaction time is dependent upon a number of factors including temperature, amount of catalyst, and the physical and chemical characteristics of the soil. Considerable difficulty was encountered in obtaining the desired reaction and depth of penetration. New materials and information have been received from the manufacturer and additional testing is planned.

Material R-1

This is a water repellent material which can be dispersed in water and which shows considerable promise for waterproofing sandy soils. Rates as low as 23 pounds per acre completely waterproofed a loamy sand soil as indicated in Figure 1. Figure 1 also shows that application rates are

critical and an excessive application is ineffective. The optimum rate of application is primarily dependent upon the specific surface area of the soil and soils containing large percentages of silt and clay require large application rates of R-1 which do not appear economically feasible. Treated soil must be absolutely dry before R-1 exhibits water repellent characteristics. This is shown in Figure 2 where the only variation in treatments was the dryness of the soil. The surface of the dry column was completely waterproof, the wet column was not affected by the R-1, and the column dried to an apparent depth of 1/2 inch was affected only slightly because the soil surface was not actually completely dry.

A major problem in the use of R-1 is the fact that it flocculates in water of poor quality so that all our applications were made with the material dispersed in distilled water. The manufacturer believes that this problem can be solved and is now working on it. Erosion resistance was very poor and all soil panel tests failed because the treated soil washed away.

Material R-2

This is an experimental soil stabilizing compound which had demonstrated soil waterproofing characteristics in tests by the manufacturer. It can be prepared as a powder or as a water solution. The original supply was received in solution form and initial tests on infiltration cylinders showed that 480 pounds per acre sprayed on the surface of a loamy sand soil completely stopped infiltration. Test results were not consistant and it became apparent that the material deteriorated when allowed to stand for several days in a diluted stock solution. Material in the 55 gallon supply drum also deteriorated as solution was

withdrawn and air entered the drum. Six months after the original tests the required application rate increased to 540 pounds per acre. The manufacturer thought the deterioration problem could be solved by using the powder form but we were never able to completely stop infiltration with the powder, even at rates of 10,000 pounds per acre. Distilled water was used for all testing. The material reacts with Ca and Mg in hard water to form insoluble curds. The manufacturer will attempt to solve the deterioration problem and if this can be done we will re-evaluate the material.

Material R-4

This is a two stage process involving the application of two solutions in separate applications. Following application of the second solution a complex reaction occurs, involving the soil exchange complex as well as the applied materials, and insoluble compounds are formed which are water repellent. Although results to date have not been successful we believe that this two stage process offers considerable promise for waterproofing a layer of soil, rather than the surface alone, with a spray application. Single stage applications waterproof only the soil surface when applied as a spray and are quite susceptible to erosion.

Determining the relationship between required amounts of the two materials, designated as R-4(a) and R-4(b), is not a straightforward process as indicated in Figure 3. The quantity of either material can be reduced, up to a point, if the other is increased. Cost factors will undoubtedly determine the optimum proportions.

Erosion resistance was fair in the soil tray tests. A field plot has been installed but insufficient time has elapsed for meaningful observations.

Combined S-1 and R-1

A 5 by 5 foot soil tray was treated on October 6, 1960, with S-1 at 1,300 pounds per acre followed by 100 pounds per acre of R-1. The treatment has produced essentially 100 percent runoff of artificial precipitation and no deterioration has been observed to date. A field panel has been installed but measurements have not yet been made.

SUMMARY AND CONCLUSIONS:

Preliminary tests of materials intended to increase precipitation runoff have been promising. An experimental asphalt emulsion has stabilized soil against erosion and has shown good resistance to deterioration in limited exposure tests to date. Several materials have been tested which form a water repellent barrier on the soil surface when applied as a spray. Problems relative to flocculation in hard water are common to these repellent materials but manufacturers are working to solve them and state that it can be done. The repellent treatments are also subject to erosion but it appears possible to solve this problem by using a two stage application to treat soil below the surface, or by using the repellents in combination with a soil stabilizer. A treatment of this latter nature appeared quite promising in laboratory evaluations and is now under field test.

PERSONNEL: L. E. Myers, C. L. Jenson, G. W. Frasier

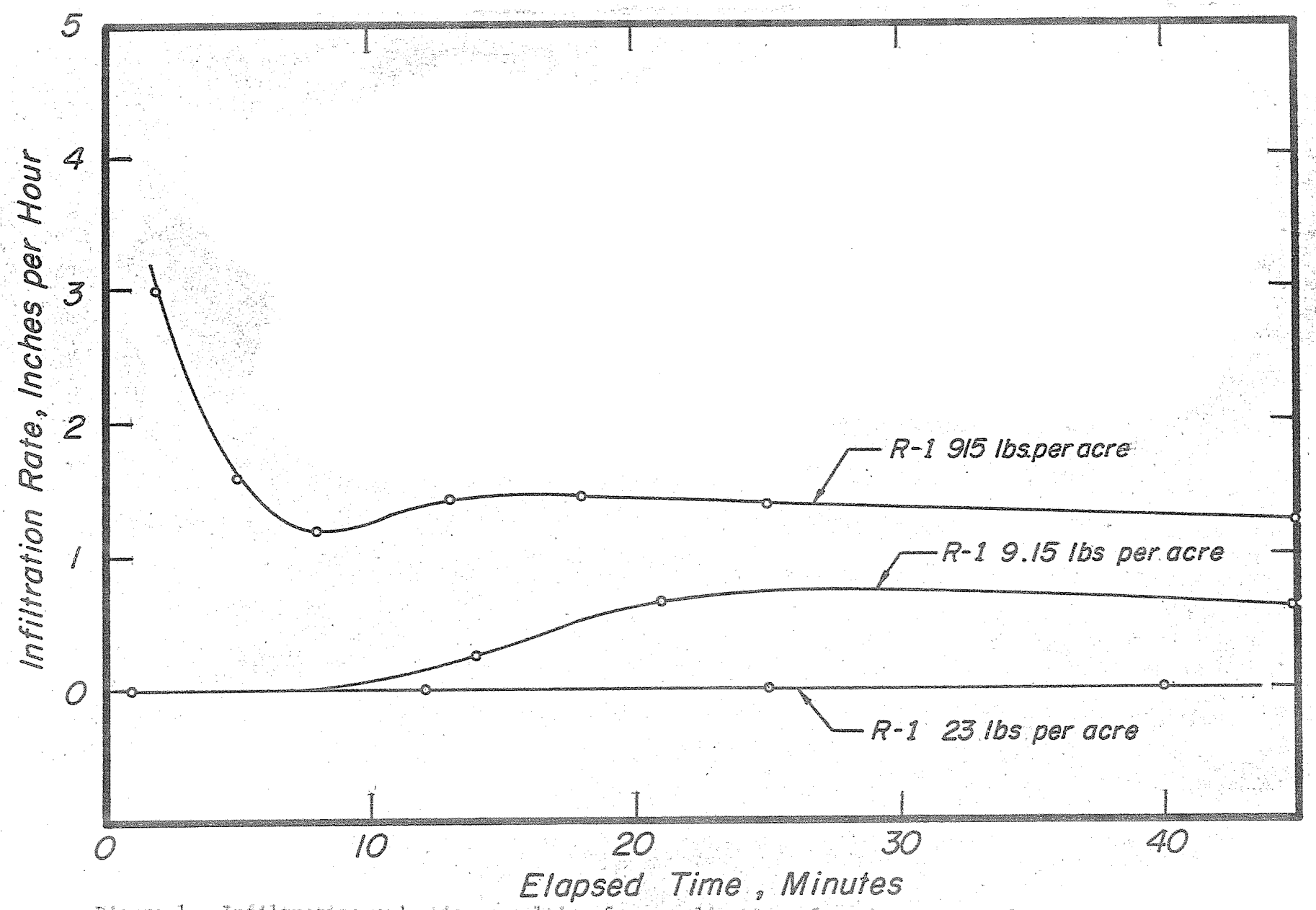

Figure 1 - Infiltration reduction resulting from application of various [illegible] R-1 to the surface of a loamy sand soil.

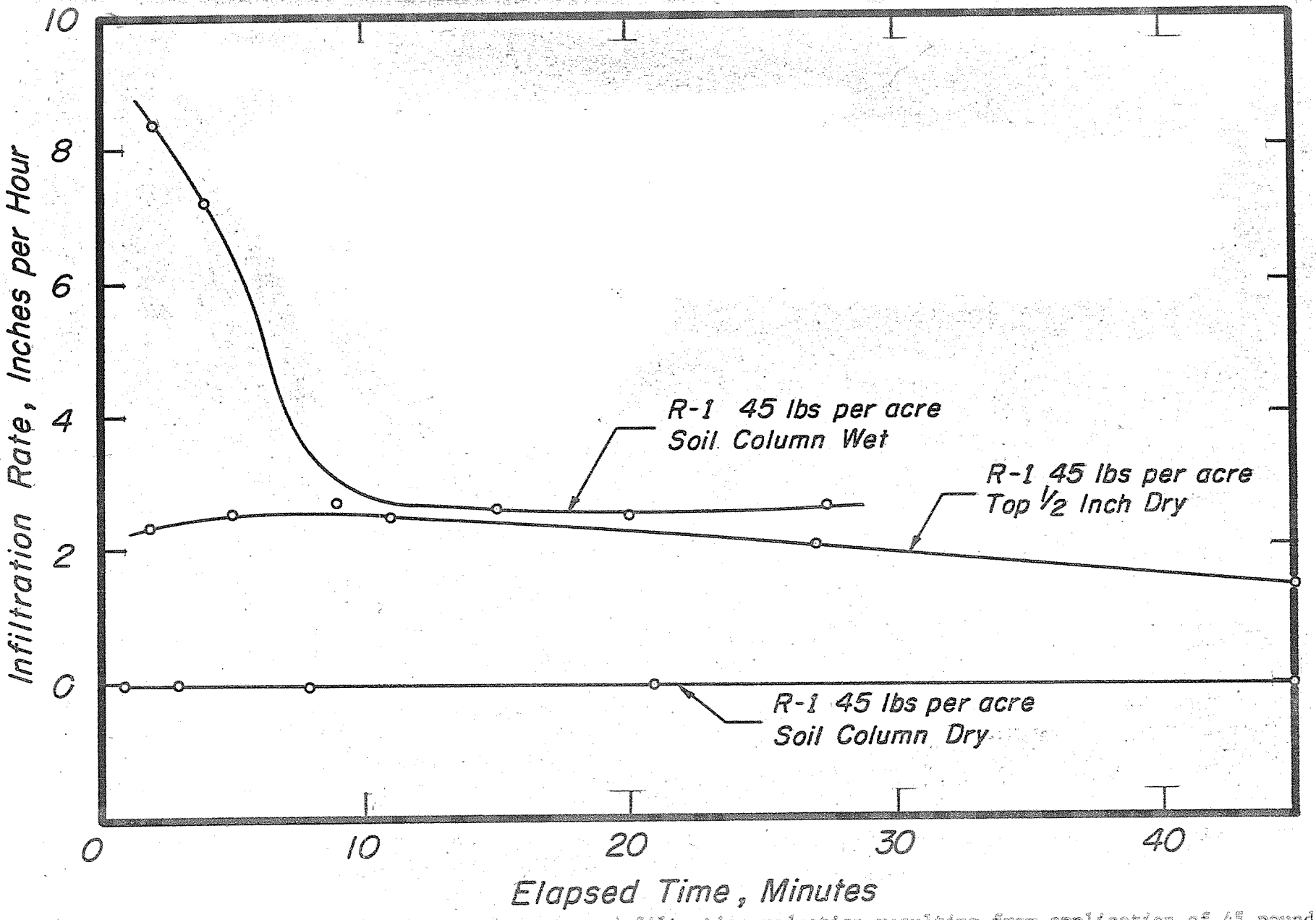

Figure 2 - Effect of soil moisture content on infiltration reduction resulting from application of 45 pounds per acre of water repellent material R-1 to the surface of a loamy sand soil.

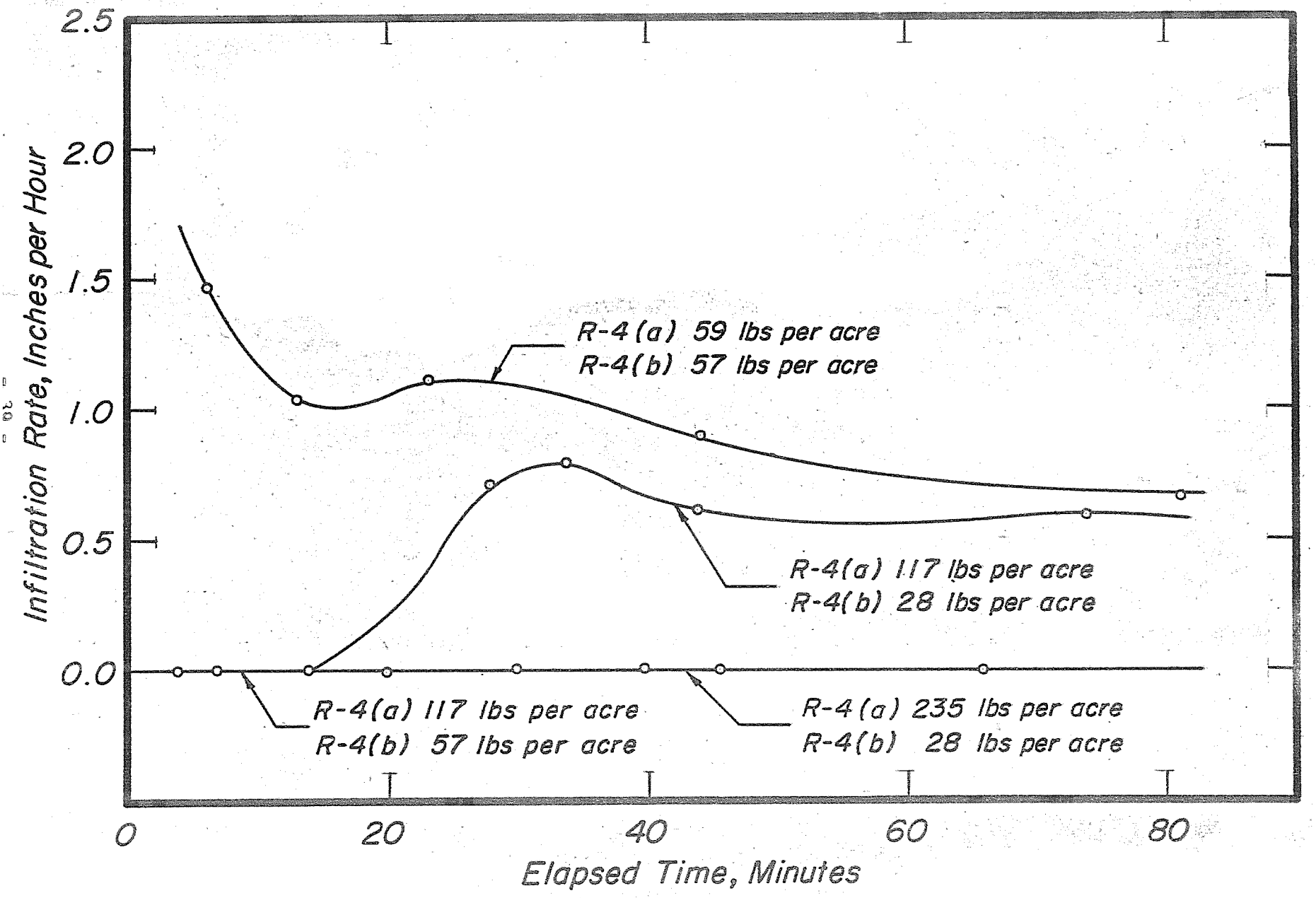

Figure 3 - Infiltration reduction resulting from application of [illegible] water repellent treatment R-4 to the surface of a loamy sand soil.

TITLE: APPLICATION OF HEXADECANOL-OCTADECANOL MONOFILMS TO SMALL PONDS.

LINE PROJECT: SWC c10-4 CODE NO.: Ariz-WCL-9

INTRODUCTION:

Evaporation from water surfaces is one of the major non-productive losses which deplete available water supplies in arid and semi-arid agricultural and pastoral areas. This loss is particularly important where water storage facilities are small and shallow. Stock ponds generally fall in this category and evaporation losses limit use of stock ponds in many rangeland areas of the Southwest.

A considerable amount of research has been done on the application and effectiveness of evaporation suppressing monofilms. Hexadecanol-octadecanol mixtures have been found to be the most effective materials for water temperature conditions prevalent in the Southwest. Floating wire-mesh rafts have been shown to be satisfactory devices for applying monofilms to water surfaces up to two acres in size. Indicator oils for measuring the pressure of monofilms have been developed. These developments presently are being used in the design and evaluation of a practical, low-cost raft system for applying monofilms to small ponds.

PROCEDURE:

The original raft design revealed fatal structural weaknesses during field tests in late 1959 and early 1960. These were easily corrected and improved rafts were furnished cooperators in Nevada and Arizona. Personnel of the Bureau of Land Management agreed to run tests on a two-acre stock pond near Caliente, Nevada, and personnel of the Watershed Technology Research Branch, Agricultural Research Service, agreed to run tests on three ponds near Tombstone, Arizona. They were also provided supplies of hexadecanol-octadecanol and indicator oils.

Previous attempts failed to obtain reasonably reliable estimates of evaporation reduction from differences in water surface drop during alternate periods of treatment and non-treatment with monofilm. It was then decided to use indicator oils and these were prepared on the basis of information supplied by the U. S. Bureau of Reclamation. Evaporation suppression will be calculated on the basis of film pressure indicated by application of indicator oils to various points on the water surfaces before and after recharging the rafts. Other investigators have done work to relate evaporation suppression to film pressure and their findings will be used to make the calculations.

Plans called for replenishing the rafts once a month and for measurement of film pressure before and after replenishment. Air and water temperature was to be measured, wind speed and direction measured or estimated, the condition of hexadecanol-octadecanol flakes in the raft observed, and other observations, such as algae growth, were to be made as pertinent to the performance of the rafts.

RESULTS AND DISCUSSION:

Few data were obtained because of anchor system failure at one site and a natural disaster at the others.

Tombstone Ponds:

Stock ponds in the Tombstone area remained dry because of unusually low rainfall and no data were obtained from the three instrumented ponds.

Nevada Pond:

The raft was installed on July 26, 1960. Measurements on July 29 indicated a minimum film pressure over the entire pond surface in excess of 12 dynes per centimeter with some areas in excess of 34 dynes per

centimeter. Wind speed was about 10 miles per hour. Australian research has indicated that this film would reduce evaporation more than 40 percent. A temporary personnel shortage prevented visiting the pond again until September 15 when it was found that the anchor system had failed due to storm runoff filling the pond above the anticipated high water line. The hexadecanol-octadecanol had been depleted and only partial film coverage could be detected. On November 1 the anchor system had failed again and no measurements were made. Operations were suspended until the spring of 1961.

A new anchor system is being designed and arrangements will be made for recharging the rafts at intervals not exceeding one month during the next study season. Study ponds are also being obtained near the Laboratory site to permit detailed studies of film distribution patterns.

CONCLUSIONS:

Despite the generally discouraging failures, the one set of measurements obtained confirmed the assumption that an adequately maintained raft will satisfactorily apply a monofilm to a 2 acre pond, even with a 10 miles per hour wind.

PERSONNEL: L. E. Myers, C. L. Jenson, G. W. Frasier.

TITLE: DYNAMIC SIMILARITY IN ELBOW FLOW METERS

LINE PROJECT: SWC c11-1 CODE NO.: Ariz.-WCL-2

INTRODUCTION:

The 1950 United States Census of Agriculture reported that all applied water was measured on only 31 percent of the irrigated land in the States of Arizona, Nevada, New Mexico and Utah. Efficient use of irrigation water cannot be expected when it is not measured. This problem is particularly critical in regard to pumped water supplies where costs are high and where groundwater supplies are being depleted by excessive pumping. Low-cost, accurate methods of measuring irrigation water are urgently needed.

Previous investigators have found that standard commercial pipe elbows can be utilized as accurate, low-cost water measuring devices by correlating velocity induced pressure differentials, between the inside and the outside of the elbow bend, with rate of flow through the elbows. Use of this device has been retarded by the necessity for individual calibration of elbows because of dynamic dissimilarities caused by other elements in the pipe systems. These devices will find wide useage if standard rating curves can be developed. Accordingly, a project was initiated to develop means of obtaining dynamic similarity in elbow flow meters to permit the use of standard rating curves.

PROCEDURE:

Differential pressure-flow rate relationships were obtained for standard 3-inch, short radius, cast iron, 90 degree, flanged elbows under various conditions of deliberately induced flow disturbance and corrective measures.

Stockham number 125 elbows were used in these tests and all pipes and fittings were standard 3-inch nominal inside diameter. Pressure taps of 1/8-inch diameter were drilled through the inside and outside bend of the elbow at the center of curvature and in the center line plane of the connecting pipes. Differential pressures from 0 to 30 inches of water were measured with an inverted U-tube manometer which could be read to 1/10 inch. Differential pressures from 30 to 100 inches of water were measured with a Bourdon tube differential pressure dial gage, accurate to ± 0.5 inch, which was recalibrated at intervals with a precision pressure standard. Pressure pulsations were damped with capillary tubing.

A recirculating flow system was used including: (1) a 3-inch, 15 hp centrifugal pump with an 8 foot maximum lift from a 1,000 cubic foot sump, (2) the pipe system, and (3) a weir box which discharged into the sump. After each change in the flow system, the system was operated until stabilization of all water levels occurred so that flow rates were constant during measurement periods. The rate of flow was measured with a 90 degree V-notch weir in a baffled box constructed to meet the weir flow assumptions. Head on the weir was measured with an electrical point gage, accurate to 0.001 foot, installed in a stilling well. Volumetric calibration of the weir agreed with the theoretical weir discharge equation within ± 0.5 percent.

The test elbow meters were installed at various location in the pipe system with different arrangements of valves, elbows and straight pipe lengths to impose various flow disturbances on the elbow meters. Tests were run with and without the installation of experimental devices

intended to reduce measurement errors. A range of flow rates was used for each setup and calibration curves were constructed by plotting differential pressure in inches of water against flow rate in cfs on log-log graph paper. Equations for the plotted curves were obtained by graphic measurement.

RESULTS AND DISCUSSION:

The 3-inch flow meters proved surprisingly accurate and deliberately induced errors were far smaller than expected. The measurements plotted essentially as a straight line on log-log graph paper. When plotted points fell appreciably off the straight line, it was invariably found that an error had been made in measuring the differential pressure because of an air bubble in the pressure lines or, on several occasions, because of a slight change in calibration of the precision dial gage. The equations were of the form

$$Q = CH^n$$

where Q is the flow rate in cfs, C is a constant, H is the differential pressure in feet of water, and n is a constant exponent.

Results of the various tests are as follows:

Standard installation:

The relatively ideal installation shown in Figure 1 was selected as the standard with which other tests would be compared. The elbow was installed horizontally with 28 diameters and 12 diameters of straight pipe upstream and downstream respectively. Gate valves at the ends of these straight sections were used to control the flow. Identical calibration curves were obtained, as shown in Figure 4, regardless of the valve used for flow control. This standard equation was:

$$Q = 0.326H^{0.500} \qquad (1)$$

Gate valve turbulence:

Gate valves are known to cause serious errors in elbow flow meter measurements if installed so that the jet from the partially opened valve is directly against either the inside or the outside of the elbow bend. Minimum error occurs when the valve is installed at 90 degrees to the elbow curvature. This latter situation was checked by the setup shown in Figure 2 where valve number 1 was installed 4 diameters upstream from the vertically installed elbow and 20 diameters of straight pipe followed the elbow. Flow was controlled with valve number 2 which was installed 46 diameters upstream from an elbow which discharged into valve number 1. Calibration curves were obtained with valve number 1 at various settings. Equations for these curves were as follows:

Valve open $Q = 0.324H^{0.500}$ (2)

Valve 6/10 open $Q = 0.327H^{0.500}$ (3)

Valve 4/10 open $Q = 0.320H^{0.500}$ (4)

Valve 3/10 open $Q = 0.318H^{0.503}$ (5)

Valve 2/10 open $Q = 0.310H^{0.518}$ (6)

The calibration curve for the 2/10 setting is shown in Figure 4. Errors exceeding 2 percent were not caused until the valve was less than 4/10 open.

Pump turbulence:

The effect of turbulence from a centrifugal pump was measured with the setup shown in Figure 3 with 4 diameters of straight pipe between the pump and the vertically mounted elbow and with 28 diameters downstream between the elbow and the flow controlling gate valve. The equation obtained was

$$Q = 0.321H^{0.500} \quad (7)$$

Misalignment:

Misalignment of flanged joints was considered to be a common source of error. Deliberate misalignment was introduced in the standard setup by moving the flange of the upstream pipe section as far as possible, about 1/8 inch off center, toward the inside of the elbow bend before bolting. A calibration run was then made. A second run was made with misalignment in the maximum outside position. These equations were

Maximum inside position $Q = 0.327H^{0.508}$ (8)

Maximum outside position $Q = 0.330H^{0.503}$ (9)

A sleeve insert, shown in Figure 5, was then designed to eliminate the possibility of misalignment and to eliminate variations in roughness among joints, whether the flanges are welded or threaded on the pipe. The insert introduces a slight restriction while providing a smooth transition from pipe to elbow. The equation obtained with the sleeve insert installed was identical to standard equation (1).

Elbow reversal:

The elbow was reversed in the standard setup and the resulting equation was

$$Q = 0.327H^{0.505} \quad (10)$$

Straightening vane:

Spiral flow was considered to be a source of error which could be eliminated by the use of straightening vanes. A commercial vane was obtained which consisted of twelve 1-inch fins welded around a 3/4-inch tube. After a number of runs were made with this vane installed, we began to suspect that the vane was not symmetrical around its center line and was creating rather than correcting error. The vane was then

installed immediately upstream from the elbow in the standard setup. Four runs were made with the vane rotated in 90-degree increments between runs. Two positions produced considerable deviation from the standard equation.

Position 1 $$Q = 0.303H^{0.508} \quad (11)$$

Position 2 $$Q = 0.310H^{0.513} \quad (12)$$

Alternate elbow:

An alternate elbow, also a Stockham no. 125, was tested in a number of the same setups used for the first elbow. Maximum deviations from the standard equation were less than two percent. The standard setup equation obtained was

$$Q = 0.329H^{0.503} \quad (13)$$

Discussion:

The calibration equations obtained for the various test installations are listed in the following table which shows the deviation between standard calibration equation and equations obtained with deliberately induced flow disturbances.

	Test Conditions	Equation	Deviation from Standard Equation: Flow rate 0.1 cfs Percent	Deviation from Standard Equation: Flow rate 0.9 cfs Percent
(1)	Standard	$Q = 0.326H^{0.500}$	----	----
(2)	Gate valve open	$Q = 0.324H^{0.500}$	-0.6	-0.6
(3)	Gate valve 6/10 open	$Q = 0.327H^{0.500}$	+0.3	+0.3
(4)	Gate valve 4/10 open	$Q = 0.320H^{0.500}$	-1.8	-1.8
(5)	Gate valve 3/10 open	$Q = 0.318H^{0.503}$	-2.7	-1.8
(6)	Gate valve 2/10 open	$Q = 0.310H^{0.518}$	-8.8	-1.3
(7)	Pump turbulence	$Q = 0.321H^{0.500}$	-1.5	-1.5
(8)	Misalignment, inside	$Q = 0.327H^{0.508}$	-1.5	+2.0
(9)	Misalignment, outside	$Q = 0.330H^{0.503}$	+0.6	+1.9
(10)	Reversed elbow	$Q = 0.327H^{0.505}$	-0.2	+1.4
(11)	Straightening vane, position 1	$Q = 0.303H^{0.508}$	-8.7	-5.5
(12)	Straightening vane, position 2	$Q = 0.310H^{0.513}$	-7.7	-2.3
(13)	Alternate elbow	$Q = 0.329H^{0.503}$	+0.3	+1.6

The above equations were obtained by graphic means and the constants and the exponents may be in error by $\pm$ 0.002 because of measurement errors and the deviation may be in error by $\pm$ 0.5 percent. The equations and significant errors will be calculated for the final report on this project. These equations as shown indicate that definitely significant and appreciable errors in excess of 2 percent were caused only by the partially closed gate valve and by the commercial straightening vane when both these devices immediately preceded the elbow. We were pleasantly surprised to find that, for practical purposes, the other equations were essentially

identical. Furthermore, these results were reproducible when the pipe system was torn down and reassembled between runs.

Additional tests are being made with other flow disturbing devices such as 180 degree bends and tests will be made with long and short radius elbows fabricated by various manufacturers. After work with 3-inch elbows is completed, tests will be made for 6-inch, 10-inch and 12-inch diameter elbows.

SUMMARY AND CONCLUSIONS:

Calibration curves of differential pressure versus flow rate were obtained for a standard 3-inch, short radius, cast iron, 90 degree, flanged elbow flow meter with deliberately induced flow disturbances and were compared with the calibration curve for a "standard" installation. The disturbing devices included a gate valve, centrifugal pump, misalignment of connections, and a commercial straightening vane. Only the nearly closed valve and the straightening vane caused errors exceeding 2 percent. Reversing the elbow and use of another elbow by the same manufacturer did not cause errors considered to be of practical concern. Additional tests of 3-inch elbows are in progress and the study will also include elbows of larger diameter.

Preliminary results indicate that observance of reasonable precautions and care in installation and operation will permit the use of standard calibration curves for 3-inch, short radius, cast iron, 90 degree, flanged elbow flow meters.

PERSONNEL: L. E. Myers, K. J. Brust

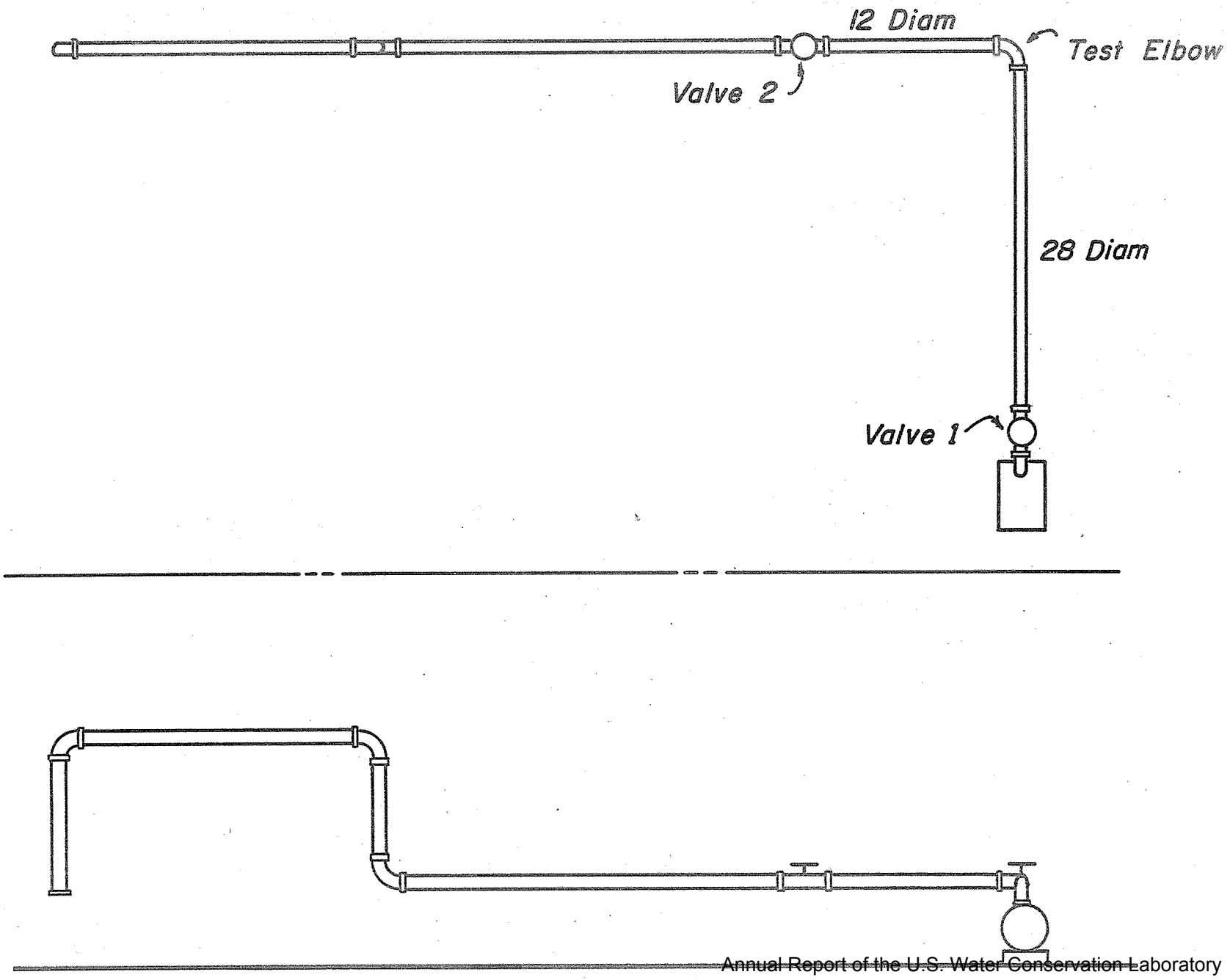

Figure 1. Pipe diagram for standard testing setup.

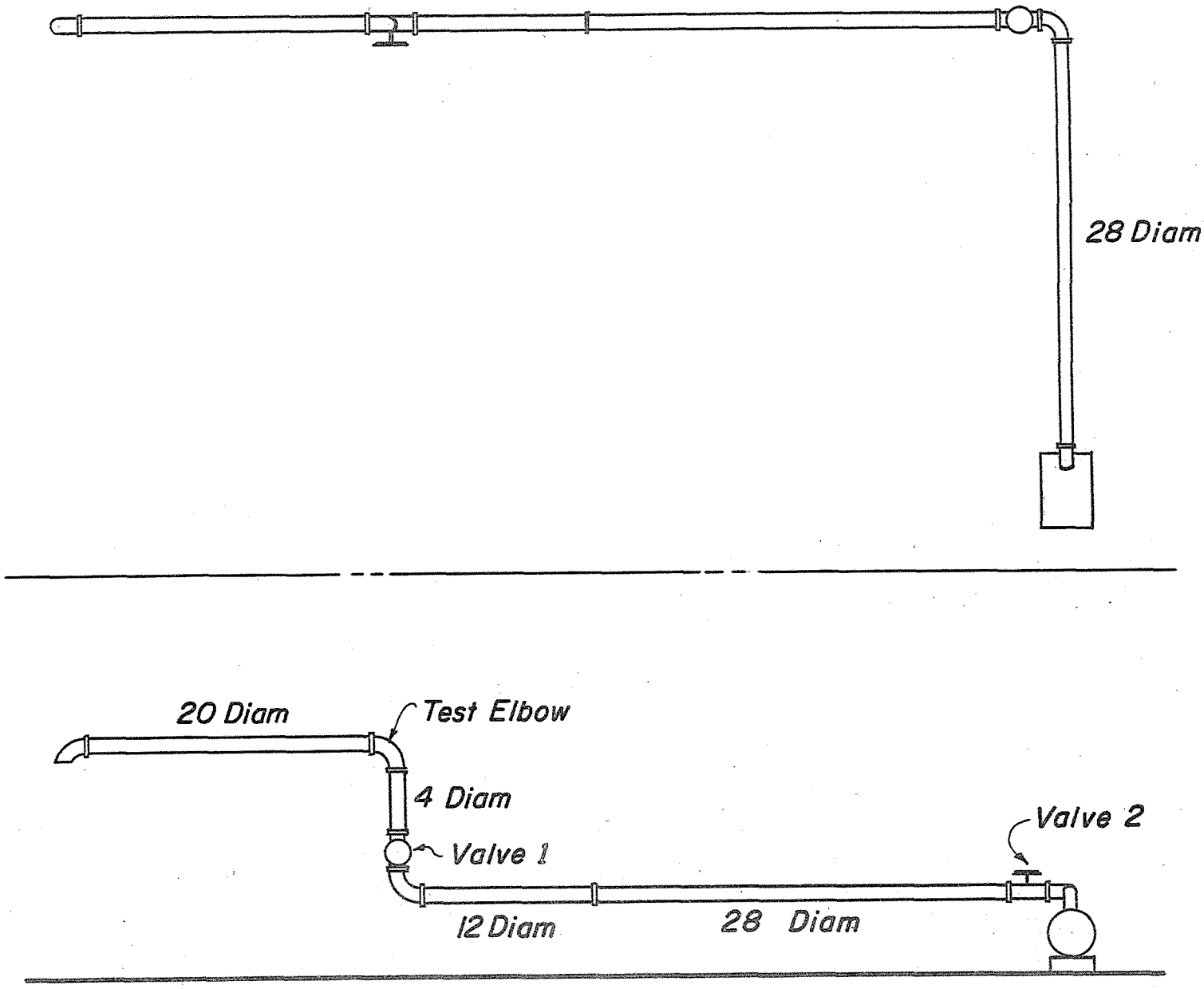

Figure 2. Pipe diagram for gate valve flow disturbance setup.

Annual Report of the U.S. Water Conservation Laboratory

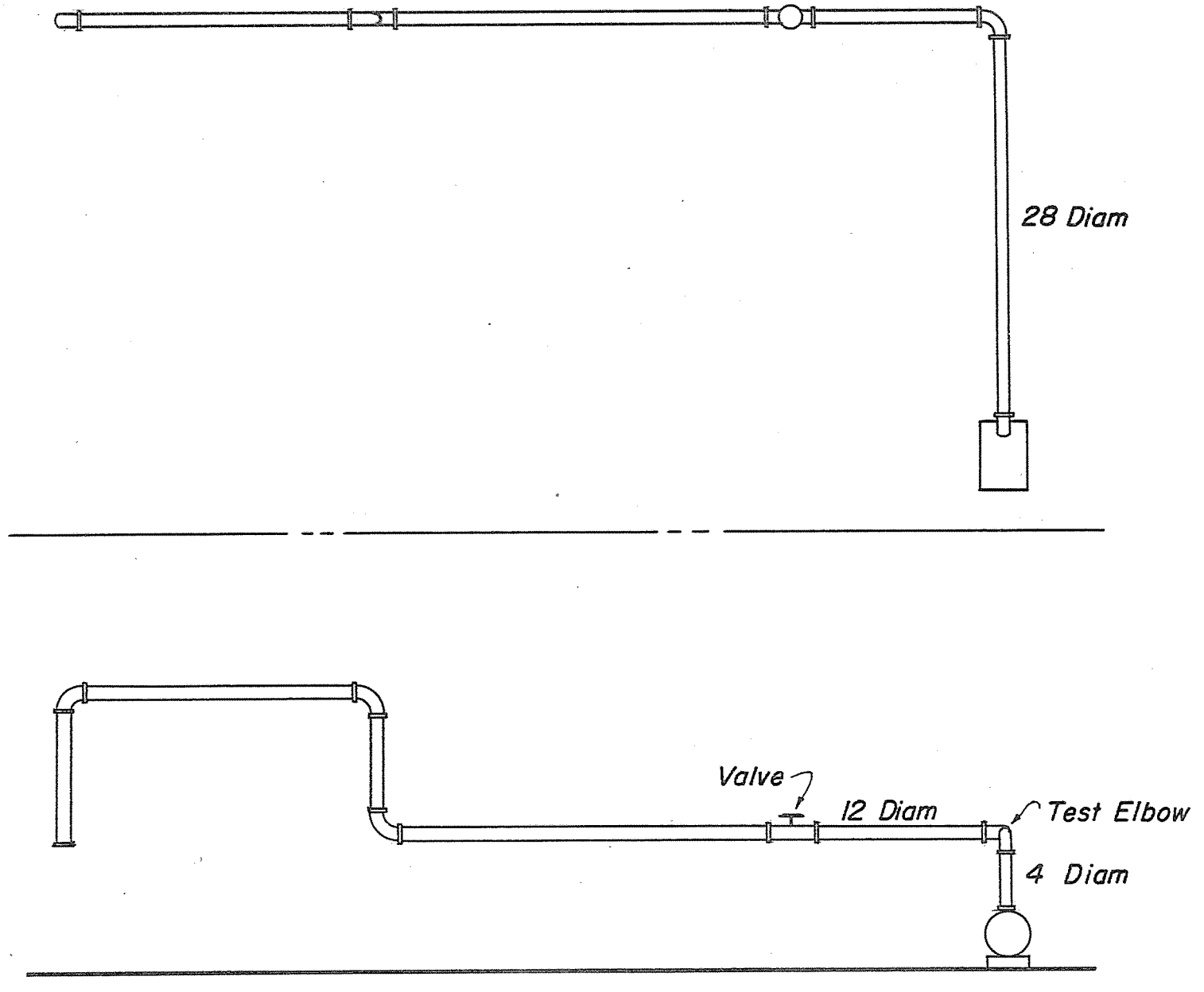

Figure 3. Pipe diagram for pump turbulence setup.

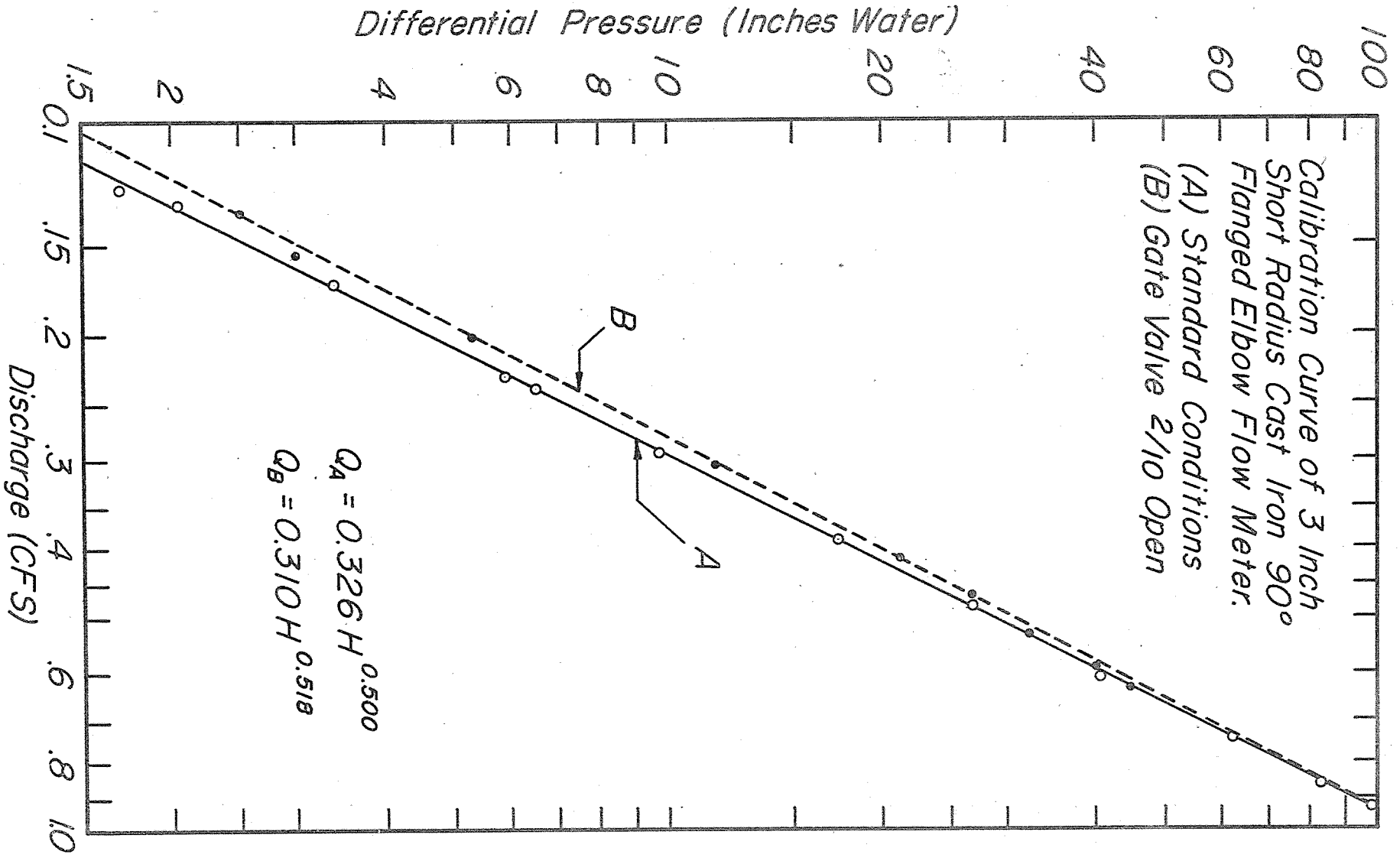

Figure 4. Representative calibration curves for 3-inch, short radius, cast iron, 90 degree, flanged elbow flow meter.

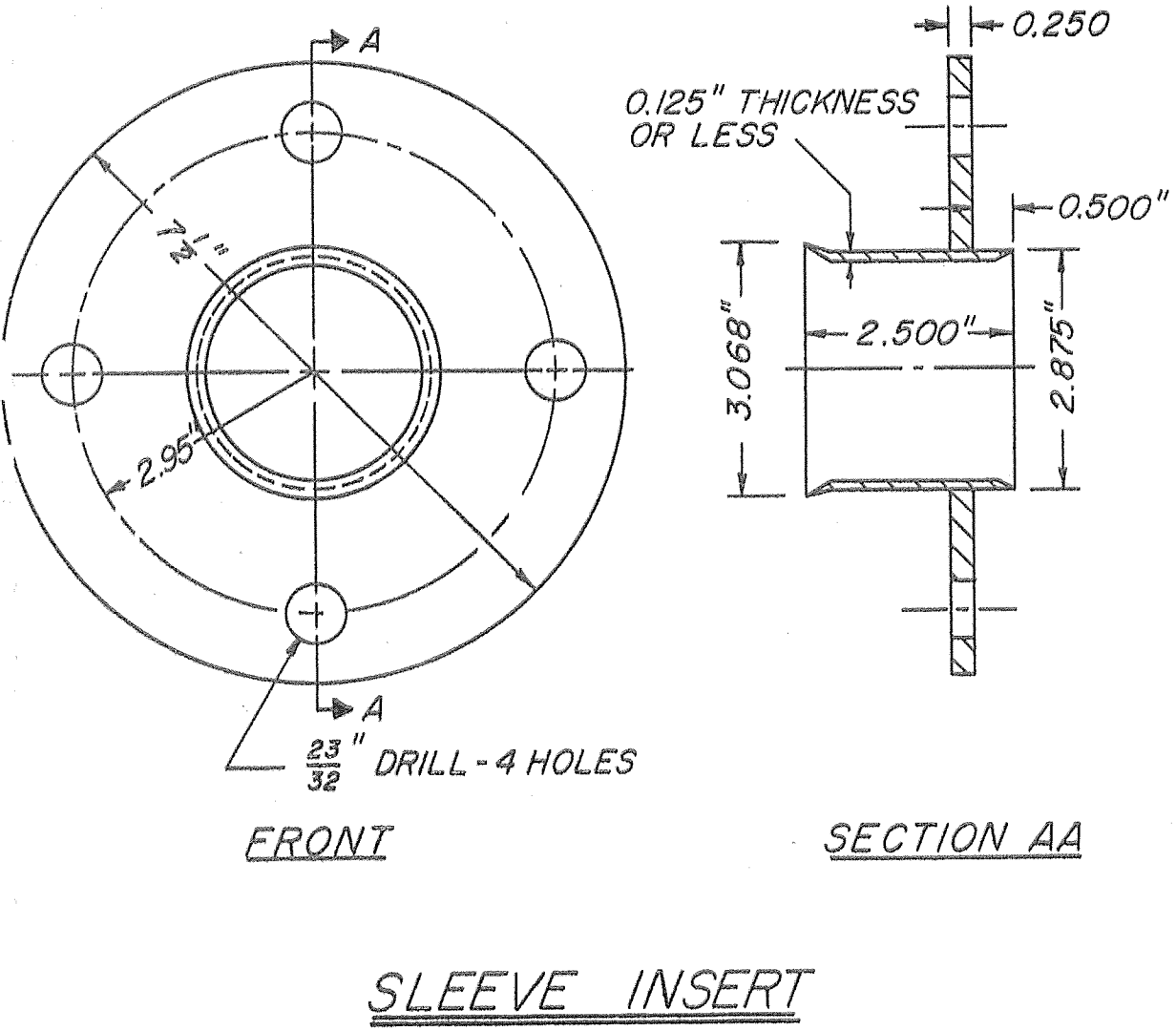

Figure 5. Sleeve insert for providing uniform entrance conditions for pipe elbow flow meters.

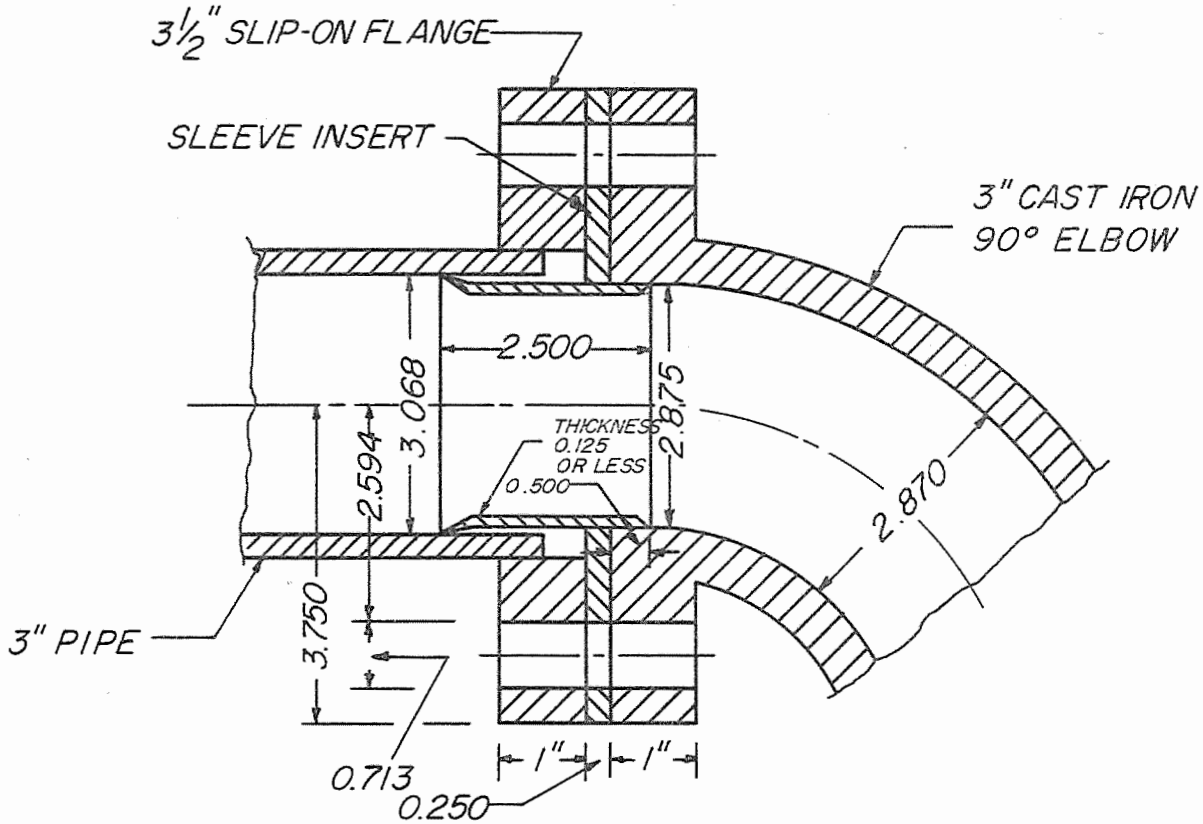

Figure 6. Sleeve insert installed in elbow flow meter.

TITLE: SOIL MOISTURE CONDITIONS AND ROOT ACTIVITY DISTRIBUTION PATTERNS.

LINE PROJECT NO.: SWC c13-1, SWC c13-6, SWC c15-5 CODE NO.: Ariz-WCL-1

LOCATION: Southwest Water Conservation Laboratory and Mesa Experimental Farm.

DATE OF INITIATION AND EXPECTED DURATION: July 1960 to July 1963.

OBJECTIVE: To determine by radiotracer techniques the root growth and root activity distribution of different crops under varying soil moisture regimes.

NEED FOR STUDY

The effect of various soil moisture regimes under different irrigation practices upon root activity distribution of crops has not received the attention it should. This is because the classical method for determining root distribution, but not necessarily root activity, involves the tedious task of trenching-out the plant root system. A non-destructive method, which can follow the root activity behavior of a plant through its entire growth cycle and is easy to conduct in the field, is an invaluable tool. Some pioneer investigations using radiotracers have been conducted in North Carolina by Hall, et al. (1), to measure root growth and activity. By adapting some of their techniques to the irrigated land some fundamental questions of soil-plant-water relations and problems of field management may be resolved.

The root activity distribution data can be employed for practical field use to ascertain the most efficient depth of placement of irrigation water or fertilizer for a particular crop at a certain time of the growing season.

DESIGN OF EXPERIMENTS AND PROCEDURE

In the preliminary study for 1960, four replicates were established on a 275' × 32' plot. Sorghum (RS-610) was planted on July 28 on a 40-inch spacing interval; eight rows were established in the 32-foot wide plot. The third and sixth rows were used for the radiotracer treatments.

One milliliter of a 12 μc/ml KH_2PO_4 solution was injected in each injection site on both sides of the test row on August 10 (Replicates II and III) and August 11 (Replicates I and IV). There were 6 injections per treatment. Figures 1 and 2 show the point of injection in respect to the plant row. Six depths--6, 12, 18, 24, 36, and 48 inches--and four distances--5, 10, 15, and 20 inches--were used. This gave a total of 24 treatment combinations which were completely randomized within a replicate.

Construction details of the injection probes are shown in figure 3. A 0.087-inch capillary tubing was fitted inside a 1/8-inch red-brass pipe and soldered to it. Two holes were drilled through a brass point to connect to the bottom of the capillary tubing. The upper end of the capillary tubing was fitted with a rubber policeman. The radioactive solution was injected through the rubber policeman into the capillary tubing with a hypodermic needle and syringe. All probes were checked for leaks before being used.

Injection probes with point 1 were used in the 1960 experiment. An improved probe point (alternate point 2) is also presented in the diagram. This is sturdier and easier to construct than the older model.

One irrigation level, 5 inches, was used which was based on a biweekly schedule following the irrigation practices of the adjacent sorghum plots. The crop was not irrigated in September because of two rains of 0.50 and 0.72 inch within a week prior to the scheduled irrigation.

Two-inch aluminum access tubes for the neutron moisture probe were installed on Replicates I and III at 5, 10, 15, and 20 inches from the test row to a depth of five feet on August 16. Soil moisture measurements were taken once a week at 12-, 18-, 24-, 30-, 36-, 42-, 48-, 54-, and 60-inch depths starting on August 19.

Plant samples were also collected every week at the same time the moisture readings were made. For the initial sampling on August 26, the whole plant was taken, but thereafter until October 21, the third leaf from the bottom was sampled for P^{32} and total P analyses. Additional sampling of grain was made and continued until November 18.

EXPERIMENTAL DATA, OBSERVATIONS AND INTERPRETATIONS

Six treatments were lost in Replicate I, two in Replicate IV, and one in Replicate II because of dying-out of the sorghum in the treated sections. Fortunately, none were lost in Replicate III. The losses were attributed to the high temperatures encountered by the young plants for the late planting date and not to any unfavorable chemical or physical condition in the plant-soil environment resulting from the injection of the tracer solution. Chemical and statistical analyses for the entire experiment are not complete. However, since Replicate III suffered no treatment losses, priority was placed on the radiochemical

analyses and calculations for this replicate. The results, interpretations and formulation of plans for the spring experiments are based primarily on this replicate.

A sample radiochemical analysis of plants taken on August 26 for Replicate III is presented in Table 1. Each analysis is for the composite of two adjoining plants in the treated row. The data have been corrected for background, decay and counter efficiency. Background for the assay equipment was 15 counts per minute; counts of 5 or more above background were considered statistically different. It is evident from the measured P^{32} activity that the roots of the month-old plants had penetrated extensively throughout the soil profile to where the tracer injections were placed.

This August 26 sampling was the first in the series of 12 weekly samples taken. The first plant sampling was delayed as long as possible because the plant material available for P^{32} and total P analyses was small. For future studies of this nature, the time of radiotracer injection and plant sampling should be made earlier than those used in this experiment.

Rate of root growth. It was possible in some of the treatments to get a good estimate of root growth from the data obtained. For example, in the 18-inch deep, 20-inch distance and 36-inch deep, 15-inch distance injection treatments there was no P^{32} activity in the plant materials sampled on August 26. The leaf samples of the same plants taken on September 1 had activities of 1319 and 833 c/m/g for the 36-inch depth and 18-inch depth treatments, respectively.

By using the time required for the P^{32} to show up in the leaf and the position of the P^{32} injection, the rates of root growth of 0.75 inch per day for the 18-inch depth, 20-inch distance plant and 1.0 inch per day for the 36-inch depth, 15-inch distance treatments were calculated.

P^{32} activity was detected in the first samplings for the 48-inch depth at the 5- and 10-inch distance from the plant row so that an accurate measurement of the rate of root growth from these locations cannot be made. However, for the root to reach these positions in the 30-day growing period, the rate of root extension must have been at least 1.6 inches per day.

The rates of root growth of 0.75, 1.0 and 1.6 inches per day seem to be reasonable values. Kramer (2) cites some references for different grasses where the rates ranged from 0.5 to 2.5 inches per day. If the calculated rates of root extension of 0.75, 1.0 and 1.6 are considered in relation to the position in the soil profile from which they were determined, there is a differential rate of root growth throughout the soil profile and that root extension occurs at a faster rate vertically than laterally. Additional analysis of data and experiment should aid in substantiating some of the interpretations that are offered at this time.

Relative root activity distribution. The ratios of P^{32} activity in the plant sample at a specified depth (or distance) to the sum of the P^{32} activities for all the treatment combinations (relative root activity) were calculated to evaluate the root activity distribution throughout the soil profile. The ratios for Replicate III are

presented graphically in Figures 4 and 5 from the leaf and whole plant analyses for the period August 26 to October 21, 1960. These ratios have some bias because the injection points were not distributed uniformly throughout the soil profile, but nevertheless, gives a relative picture of the root activity distribution.

The root activity close to the plant (5-inch depth, 6-inch distance) decreased markedly with time but remained at a high level compared to locations further away from the plant. Roots at the 10- and 15-inch distances and 12- to 24-inch depths increased in activity as the ones closer to the plant decreased. Approximately 90 percent of the root activity is confined within the region of the 36-inch depth and 15-inch distance from the plant row.

The plant rows adjoining the treated one were also sampled on October 21 and analyzed for P^{32}. Activity was present in the border plants where the injections were made 25 and 20 inches from them (15 and 20 inches from the treated row) and no measurable activity for the 30 and 25-inch distances (10 and 5 inches from the treated row). Thus under the environmental conditions for the growing season of the sorghum plants, root extension horizontally from the plant row is 25 inches for the three-month-old plants.

A five-foot deep trench was dug perpendicular to one of the buffer rows on September 23. Visual examination showed that a major portion of the roots were within the 36-inch depth, 15-inch distance boundary. Some root hairs were observed even at the five-foot depth.

The irrigation and rainfall dates are also indicated in Figures 4 and 5. On days when the irrigation and plant samples were taken the

water was applied after the sampling and moisture measurements were taken. The irrigation treatment did not seem to have any direct effect on the relative root activity behavior at any depths or distances from the plant row.

Soil moisture distribution. The soil moisture content as a function of time at 5, 10, 15, and 20 inches from the plant row and at the different depths are presented in Figure 6. The plotted values are averages of the measurements for Replicates I and III. One of the reasons for taking the moisture readings was to relate the moisture content to the root activity distribution patterns determined by the radiotracer technique. The biweekly irrigation was too frequent however, so the moisture content was usually above the equilibrium value of approximately 25 percent (field capacity) and thus changes in moisture content in a given region of the soil profile reflected not only that caused by root absorption, but that resulting from the movement of water from one region to another.

SUMMARY

A method for determining the root activity of an irrigated crop throughout its growing season has been investigated. The technique involved the injection of small amounts of radioactive solutions into the soil at various depths and distances around the plant and the measurement of the absorbed radiotracer in the aerial portion of the plant. From a knowledge of the time of appearance, the quantity of radiotracer absorbed, and the position in the soil from which the radiotracer was absorbed, it is possible to estimate the rate and extent of root growth and the relative activity of the roots.

For sorghum plants at 40-inch row spacing and under biweekly irrigation, the root zone extends 25 inches on both sides of the plant row to a depth of 5 feet. Approximately 90 percent of the root activity is located 15 inches on either side of the row to a depth of 36 inches. Average rates of root growth ranged from 0.75 to at least 1.6 inches per day and the rates seem to be related to the position of the roots in the soil profile and the direction of growth. The data used in this report did not indicate any rejuvenation of root activity at the shallower depths after a rain or irrigation.

REFERENCES

1. Hall, N. S., Chandler, W. F., Van Bavel, C. H. M., Reid, F. H., and Anderson, J. R. A tracer technique to measure growth and activity of plant root systems. North Carolina Agr. Exp. Sta. Bull. 101. 1953.

2. Kramer, P. J. Plant and soil water relationships. McGraw-Hill Book Company, Inc. pp. 126-127. 1949.

PERSONNEL: F. S. Nakayama, C. H. M. van Bavel (Advisory), and W. D. Pew (Farm Superintendent, Mesa).

Table 1. Sample analysis of P^{32} activity of plant material (c/m/g) from the different depth-distance combinations for Replicate III. (Material taken on August 26, 1960.)

		Distance from Plant Row			
		5 Inches	10 Inches	15 Inches	20 Inches
Depth from Plant Row	6 Inches	282,662	42,505	1,323	383
	12 Inches	37,660	3,806	440	440
	18 Inches	6,890	2,405	400	0
	24 Inches	1,521	1,001	281	0
	36 Inches	2,564	520	0	0
	48 Inches	4,888	481	0	0

FIGURE 1.

SCHEMATIC CROSS SECTION DIAGRAM
OF INJECTION SITES AROUND TEST ROW

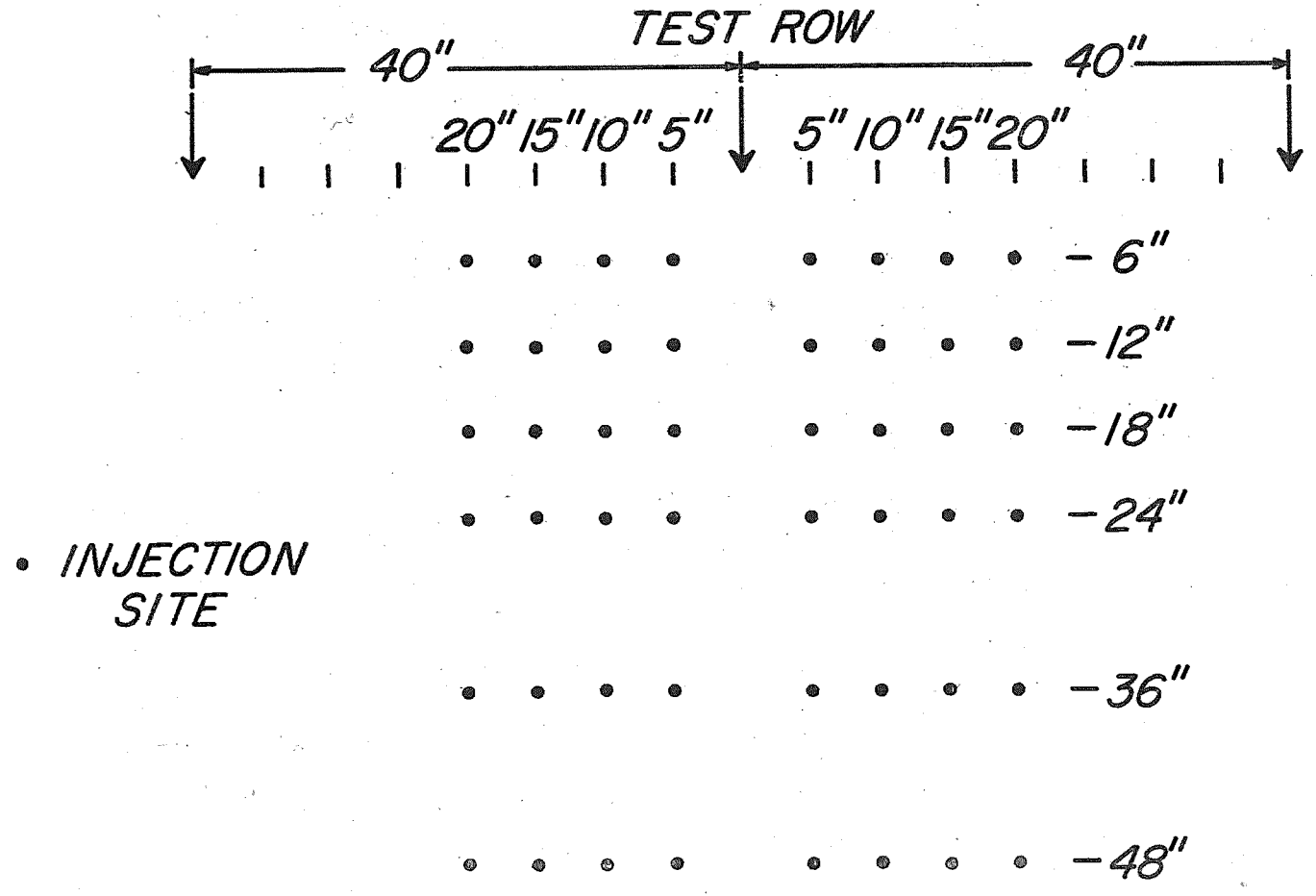

Figure 1. Schematic cross sectional diagram of injection sites around test row.

FIGURE 2

SCHEMATIC TOP VIEW OF INJECTION SITES AROUND TEST ROW

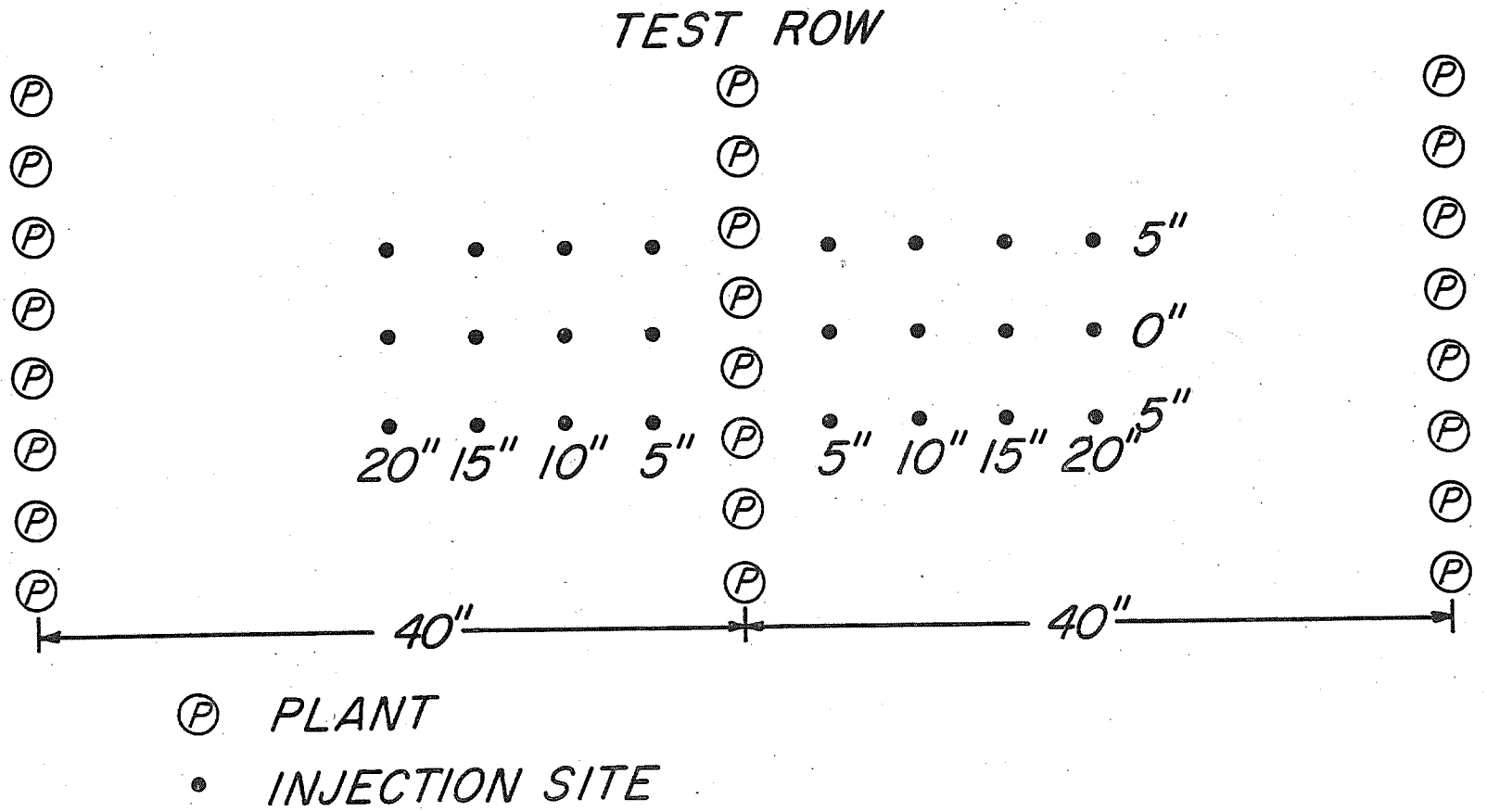

Figure 2. Schematic top view of injection sites around test row.

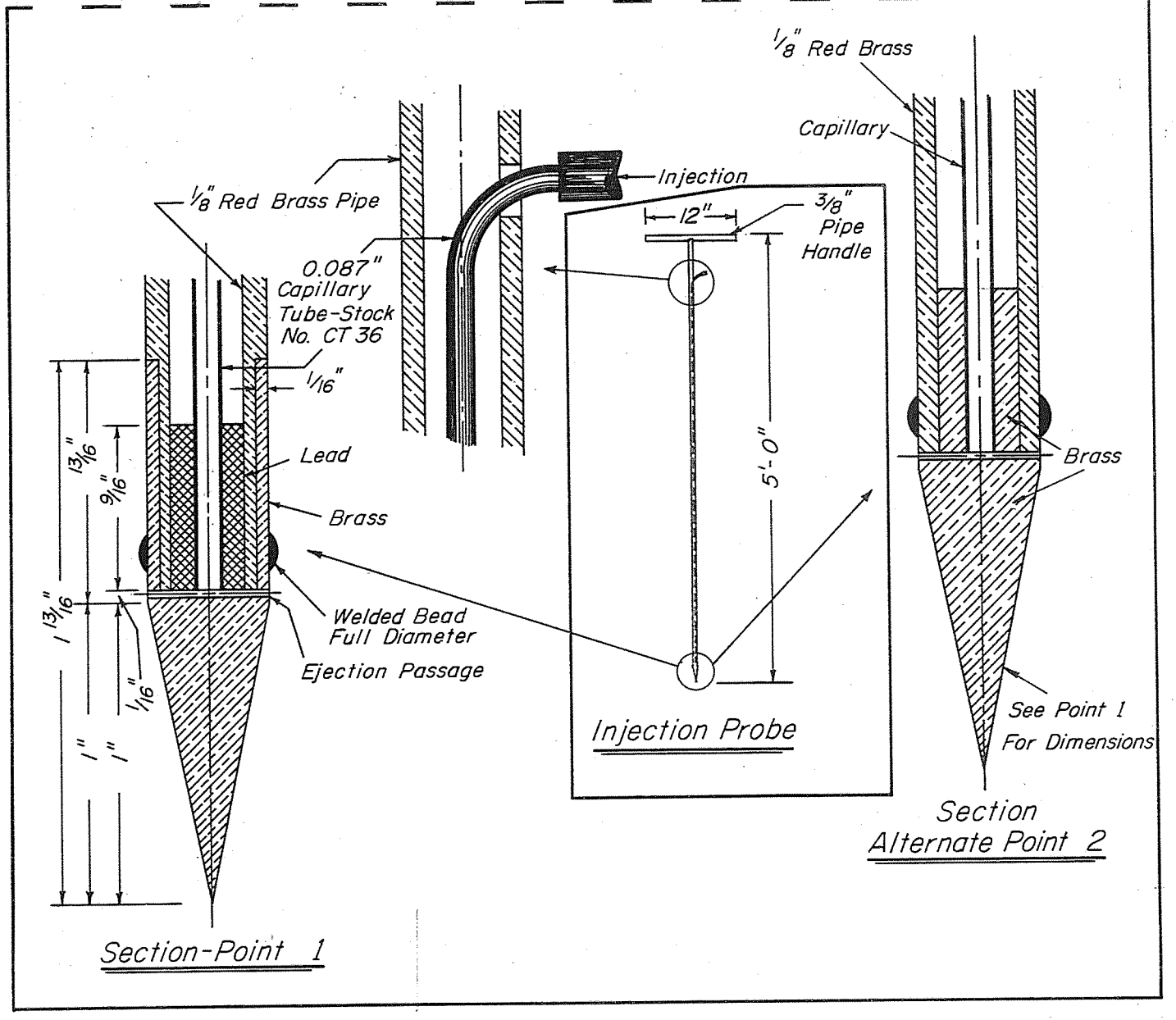

Figure 3. Construction details of radiotracer injection probe.

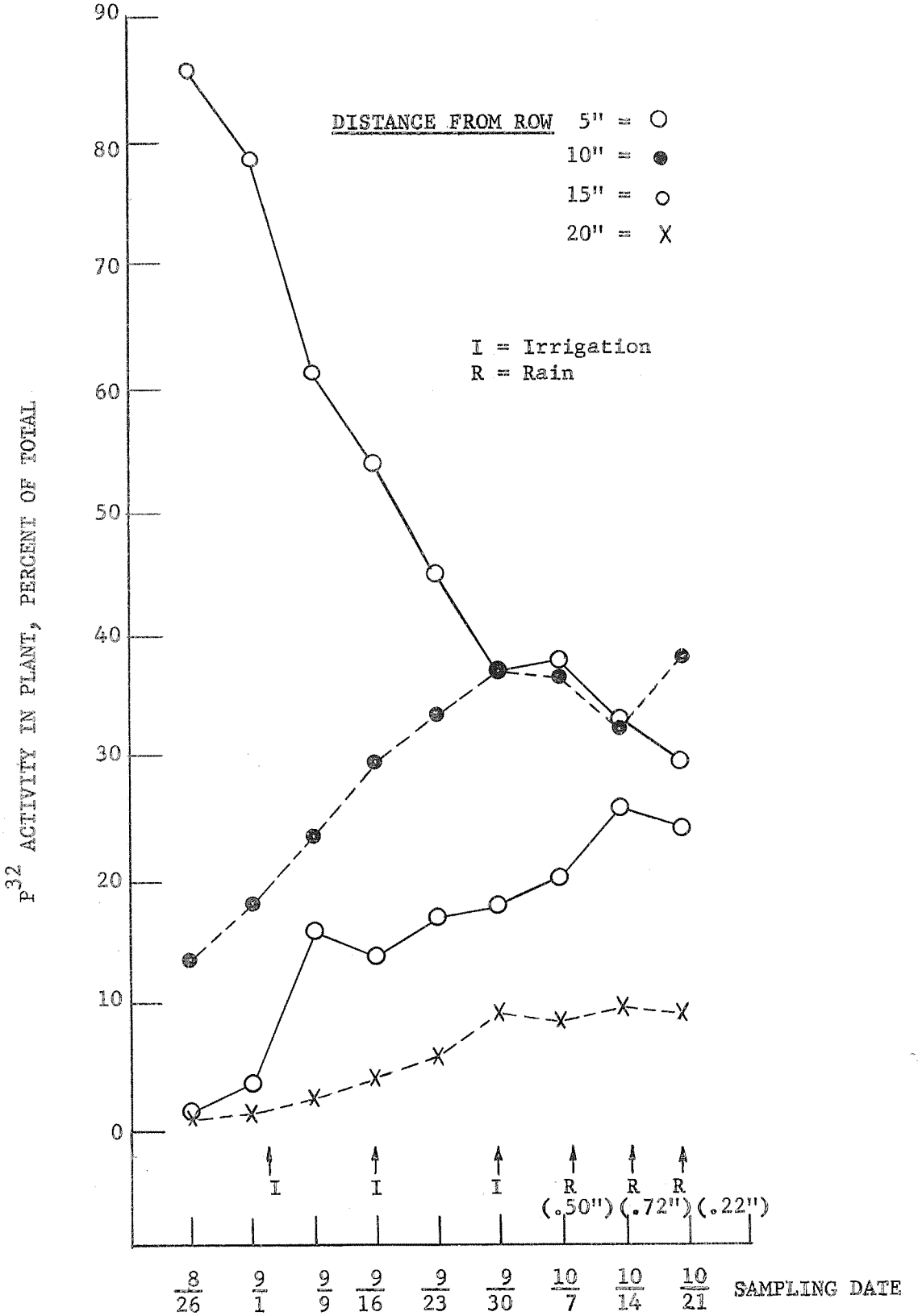

Figure 4. Relative root activity of sorghum plants, distance from row (Replicate III).

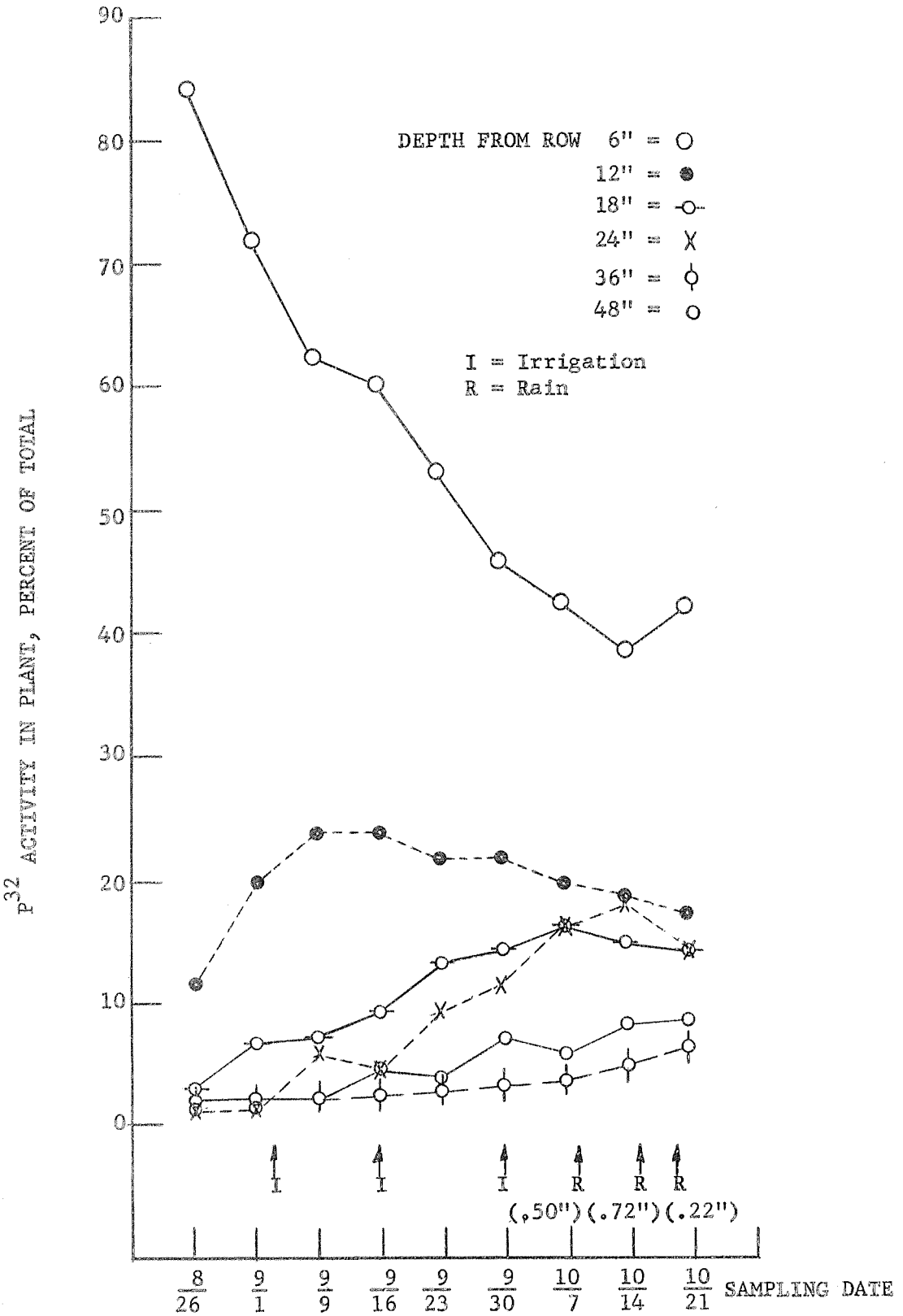

Figure 5. Relative root activity of sorghum plants, depth from row (Replicate III).

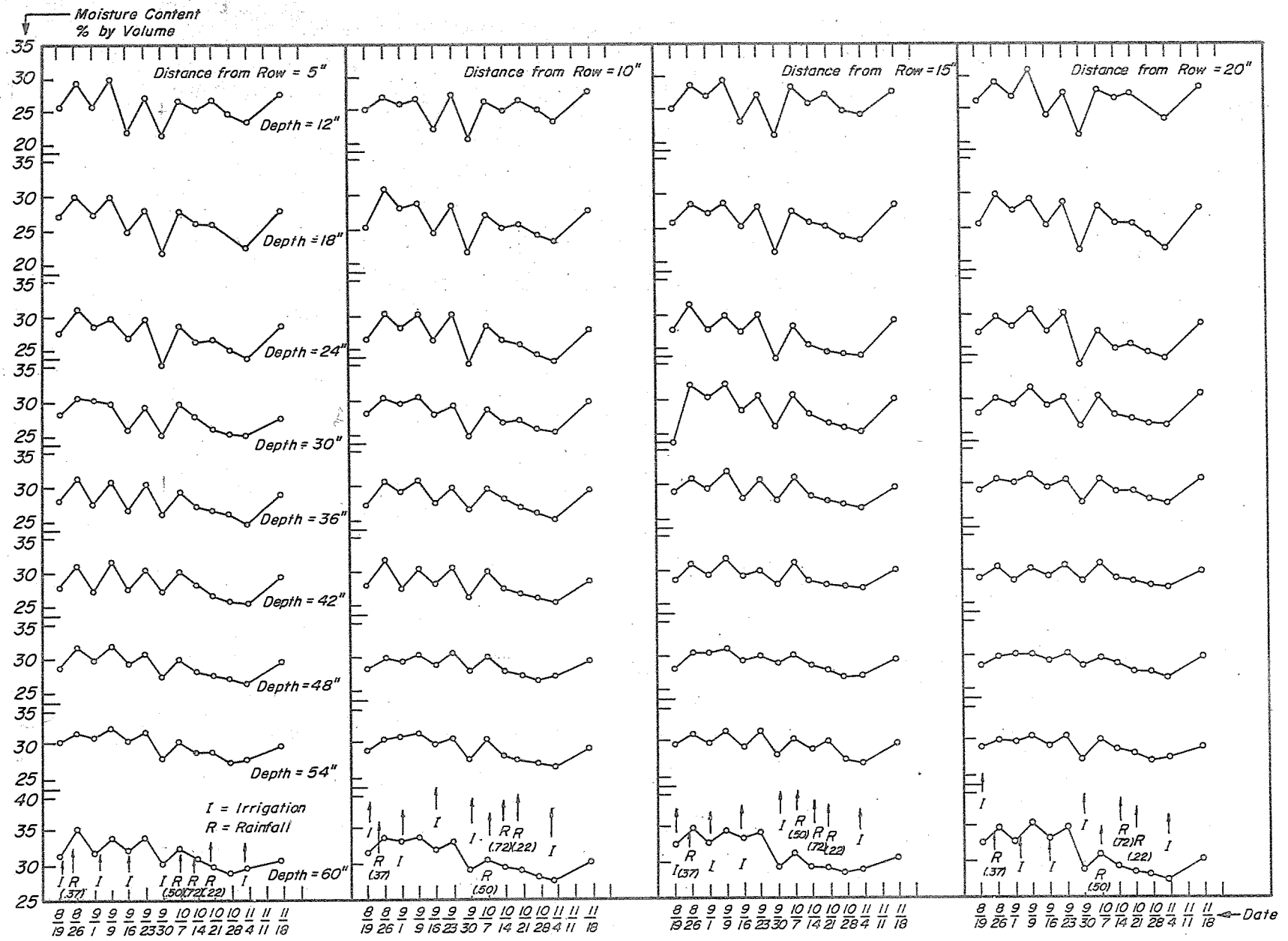

Figure 6. Moisture content around sorghum plant.

TITLE: SOIL MOISTURE POTENTIALS AND WATER UPTAKE BY ROOTS

LINE PROJECT: SWC c13-1 CODE NO.: Ariz.-WCL-3

INTRODUCTION:

The effect of moisture potential on water absorbtion by roots from a soil is difficult to determine. This is because the potential of the water in the soil is related to the quantity of water present and will change in the adsorption process. The purpose of this study is to determine the instantaneous rate of water uptake in soils which have different moisture potentials and to relate such root behavior to varying environmental conditions. In order to achieve this aim, techniques and equipment will be devised and utilized which will insure water absorption at constant moisture potentials.

One of the methods involved in the experiment is the use of tritiated water for tracing and measuring the amount of water absorbed by roots. A suitable analytical procedure for tritiated water was required and therefore the initial phase of this project was focused in this direction.

PROGRESS:

1. Laboratory facility

Alteration of the radiotracer counting room was needed. The change included the installation of an exhaust fan for health safety precautions and for the removal of heat generated by the radioassay equipment and freezer unit.

A California type fume hood is being installed in the radioisotope preparation laboratory. High vacuum equipment will be placed in the hood for use in the lyophilization of tritiated water

from soil and plant materials, combustion of organic matter, and reduction of tritiated water to gaseous hydorgen.

2. Tritium assay equipment

A Baird-Atomic Model 745A liquid scintillation counting system was obtained in June for the assay of tritiated water in accordance with principles discussed in an ARS 41 series publication (2). A diagram of the basic components used in the system is shown in Figure 1. The timer, scaler, and high voltage supply were tested and found to be compatible with existing gas flow counter and gamma ray detector.

The liquid scintillation detector and the amplifier-analyzer are the important components of this system. A schematic diagram of a section of the detector is presented in Figure 2. The 5-dram (20 ml) sample bottle is located immediately above the photomultiplier tube and separated from it by the 0.018 inch thick wires. Light which is produced from the interaction of the β-ray from tritium with the organic scintillator liquid is detected by the phototube. The phototube, unfortunately, has some inherent electrical noise (dark current) which is recorded as pulses by the scaling system and thus adds to the background count. The noise can be decreased by lowering the temperature of the phototube. The detector unit is cooled in a deepfreeze unit as shown in Figure 1.

The amplifier-analyzer receives the electrical pulses originating from the phototube through a preamplifier unit which is built into the detector component. The analyzer is designed to pass through signals which originate from the β-ray of tritium. Unfortunately, there are other electrical signals present with similar

energy characteristics as those resulting from the tritium β-rays and these will also be recorded. The amplification factor for the detector amplifier units are very large--10^5 to 10^6 for the photomultiplier tube, 40 for the preamplifier, and 160 for the amplifier-analyzer--and external electric noises are easily picked up. To reduce spurious counts, electric calculators and typewriters had to be provided with interference filters. Further stability in the system was obtained by installation of a voltage stabilizer in the power line of the amplifier-analyzer and an isolation transformer on the freezer. Spurious electric signals which affect the counting accuracy have been minimized and are not considered as a serious problem.

3. Analysis of tritiated water

The dioxane-naphthalene liquid scintillation solution similar to the one described by Kinard (2) was used in most of the assay studies. Investigations were also started on the toluene-ethanol and the dioxane-anisole-dimethoxyethane liquid scintillation solutions, but some preliminary results using the same assay conditions as the Kinard system showed that these were less efficient than the dioxane-naphthalene and thus were not explored as extensively. The dioxane-naphthalene scintillation solution was made from the following materials per liter of p-dioxane:

(a)	Naphthalene	125 g
(b)	2,5-diphenyloxazole	7.5 g
(c)	2,2'-p-phenylene-bis-(5 phenyloxazole)	0.375 g

The differential counting technique was used for the assay of tritiated water. The instrument settings for obtaining maximum efficiency of the instrument were determined by standard differential counting procedures. The conditions for optimum counting are listed in Figure 3. The counting efficiencies for different amounts of tracer water in 15 ml of scintillation solution were also determined and the results are present in Figure 3. The background which was taken on the same day as the standard solutions was 123 c/m. The graph shows that the mixture with the smaller amount of tracer water counted more efficiently than those with a larger quantity.

The results shown in Figure 3 are part of a series of mixtures of water ranging from 0.1 to 5.0 ml in 15 ml of scintillation solution. The mixtures containing 0.1 and 3.0 froze at -2° C. and those with 4.0 ml H_2O and higher exhibited phase separation at room temperature and also froze in two phases at -2° C. These samples were not assayed for tritiated water.

SUMMARY

A liquid scintillation method for the assay of tritiated water was investigated using a single phototube type liquid scintillation counter system. The procedure can be used to analyze 0.25 to 2 ml of tracer water. Counting efficiency of 7.5% was obtained for a mixture of 0.25 ml tritiated water and 15 ml of dioxane-naphthalene scintillation solution. Counting efficiency decreased proportionately with increasing amounts of water.

The minimum detectable concentration of tritiated water is 4×10^{-5} μc(89c/m)/ml at the 95% confidence level if 1 ml of tracer water is available for analysis, counting efficiency is 5%, background is 125 counts per minute, and the counting period is 30 minutes. Experiments using tritiated water are, therefore, being designed to meet the sensitivities of the assay equipment. In addition, since the maximum permissible exposure concentration of tritiated water is 0.1 μc/ml, there is some flexibility regarding the manner in which the experiments can be conducted.

REFERENCES:

1. Kinard, F. E. A liquid scintillator for the analysis of tritium in water. Atomic Energy Commission Report DP-190. 1956.

2. Nakayama, F. S. Application of tritium tracer in soil and plant water investigations. USDA ARS 41-37. 1960.

PERSONNEL: F. S. Nakayama, W. L. Ehrler, C. H. M. van Bavel (advisory)

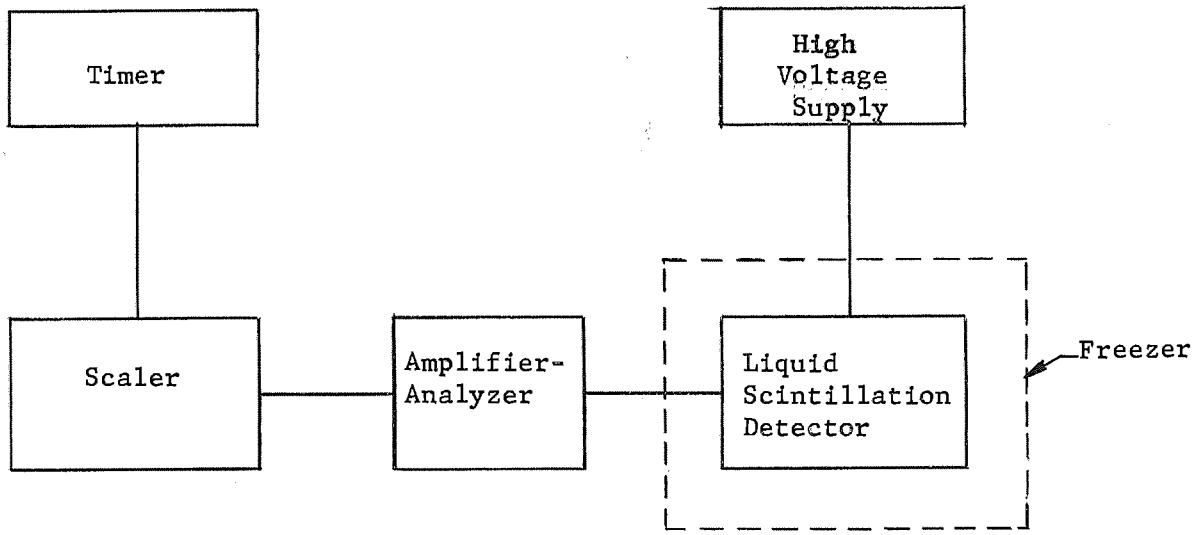

Figure 1. Diagram showing the components of the single photomultiplier tube type liquid scintillation detector system.

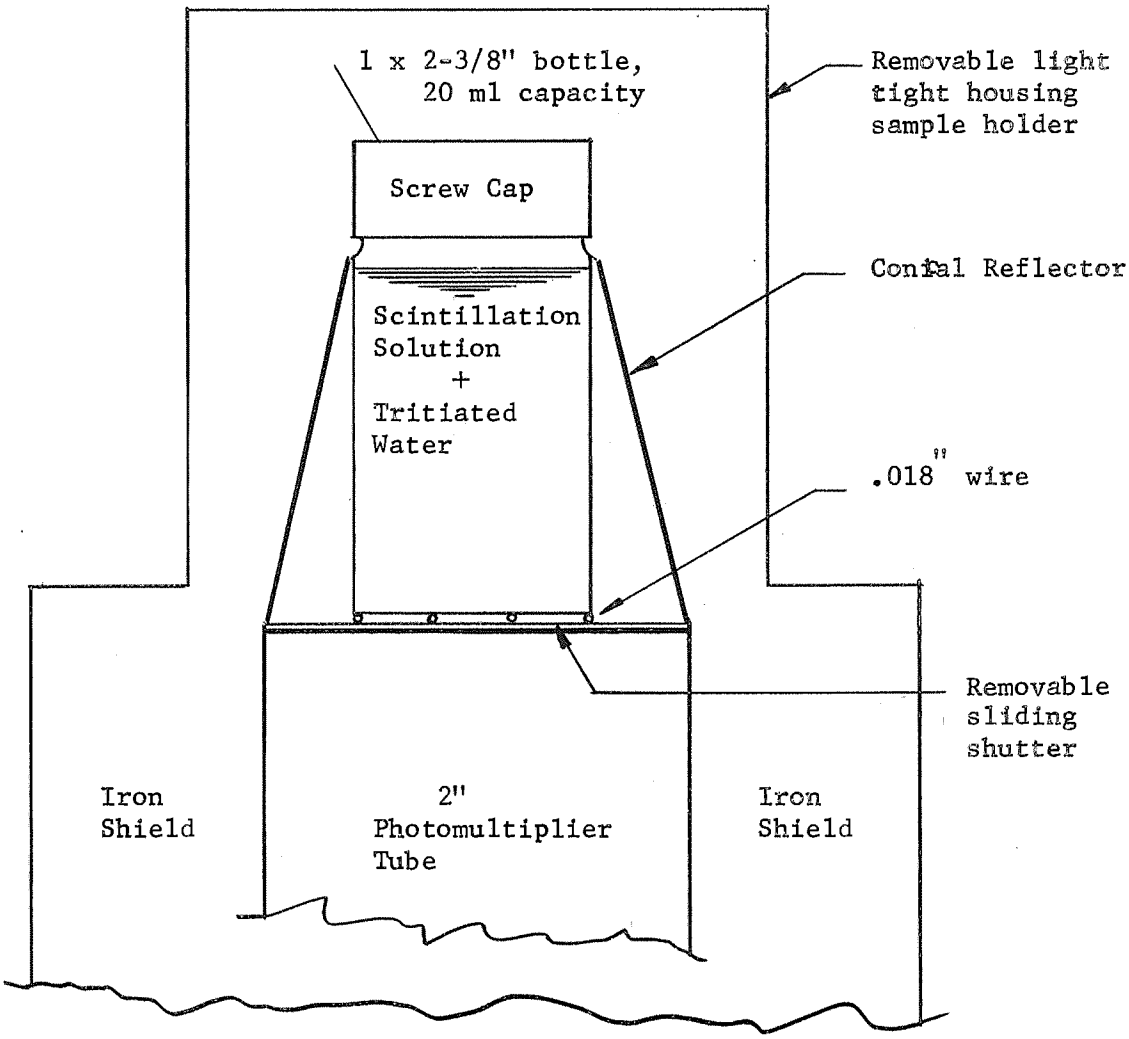

Figure 2. Section of liquid scintillation detector.

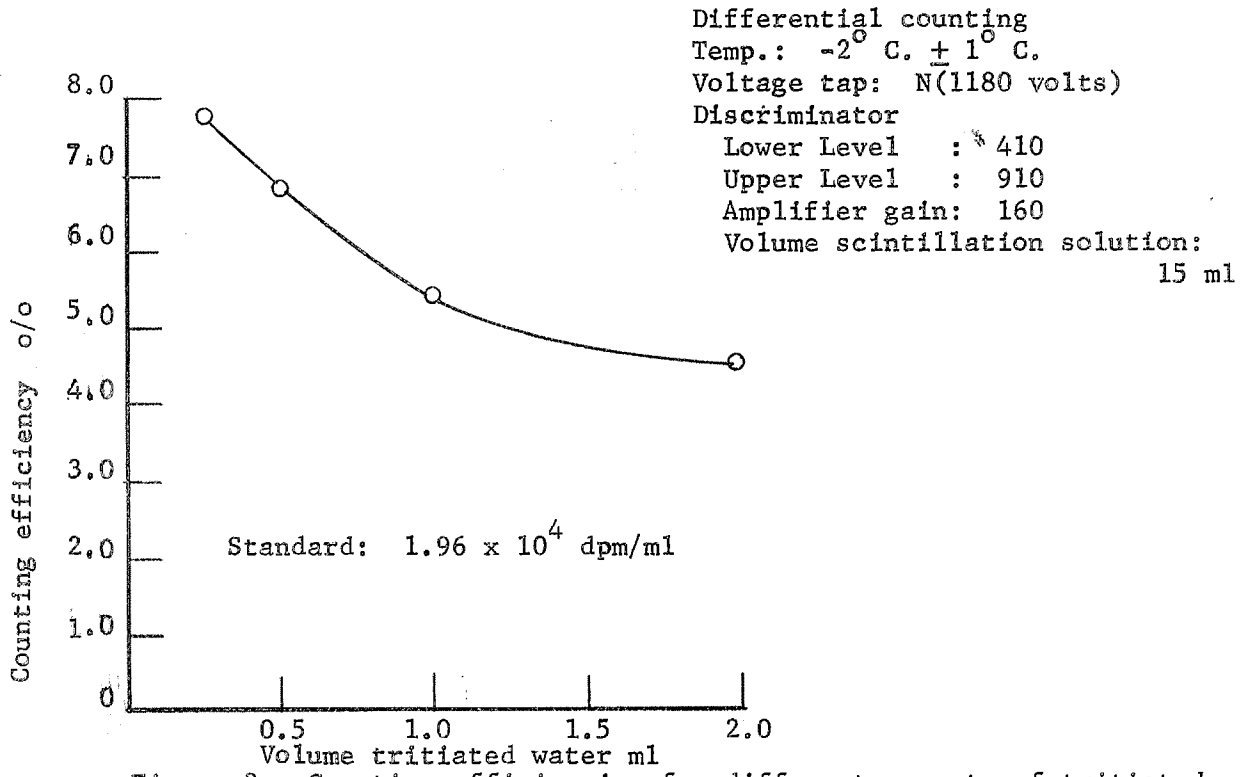

Figure 3. Counting efficiencies for different amounts of tritiated water.

TITLE: CALIBRATION AND EVALUATION OF NET RADIOMETERS

LINE PROJECT NO.: SWC C13-1 CODE NO.: Ariz.-WCL-6

INTRODUCTION

The energy budget method, by which the flux of water vapor and sensible heat may be measured indirectly, requires estimation or measurement of net radiation. Net radiation measurements may also be an aid to forecasters in determining air mass modification. Net radiation may be measured directly with net radiometers; however, the commercially available net radiometers are not considered satisfactory because of the size and environmental influences. Some of the net radiometers change calibration during their use. A need then exists to develop an acceptable net radiometer and a laboratory method of calibration over the wave lengths involved.

THEORY

The net radiometer is an instrument designed to measure the flux of radiation through a horizontal plane. The measurement of net radiation, in principle, is quite simple. One simply has to place a blackened plate in the radiational field and measure the temperature difference which develops between its surfaces. If one uses a thermal transducer in place of the blackened plate, net radiation is measured as follows:

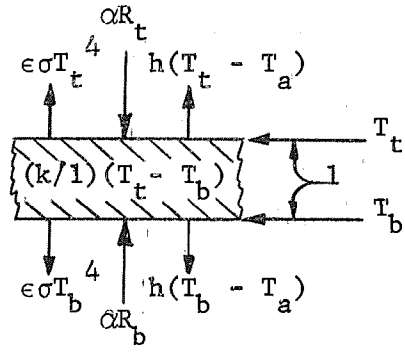

α = Absorptivity of transducer surface

ϵ = Emissivity of radiometer surface

σ = Stefan-Boltzmann constant

h = Thermal convection coefficient

k = Thermal conductivity of transducer

T_a = Air temperature

T_t = Temperature of top surface

T_b = Temperature of bottom surface

R_t = Irradiation upon the top surface

R_b = Irradiation upon the bottom surface

R_n = Net radiation

On surface t, the energy balance is

$$\alpha R_t = \epsilon\sigma T_t^4 + h(T_t - T_a) + \frac{k}{l}(T_t - T_b). \quad (1)$$

Similarly, the energy balance on surface b is

$$\alpha R_b = \epsilon\sigma T_b^4 + h(T_b - T_a) - \frac{k}{l}(T_t - T_b). \quad (2)$$

Subtracting (2) from (1), we have

$$R_n = \alpha(R_t - R_b) = \epsilon\sigma(T_t^4 - T_b^4) + h(T_t - T_b) + \frac{2k}{l}(T_t - T_b). \quad (3)$$

If the term involving thermal convection was eliminated, equation (3) would become

$$R_n = \epsilon\sigma(T_t^4 - T_b^4) + \frac{2k}{l}(T_t - T_b). \quad (4)$$

The heat flow through the sensing element may be expressed as

$$H = k(T_t - T_b)/l. \quad (5)$$

Since a thermocouple assembly is located within the thermal transducer, a temperature difference, $f(T_t - T_b)$, is set up between the hot and cold junctions. This temperature difference is related to the

over-all temperature difference $(T_t - T_b)$ by a proportionally constant C and is represented by

$$f(T_t - T_b) = C(T_t - T_b). \tag{6}$$

A thermoelectric potential E is set up which is given by

$$E = Bf(T_t - T_b), \tag{7}$$

where B is the thermoelectric power. This thermoelectric potential E is related to the heat flow by

$$E = BC(T_t - T_b). \tag{8}$$

By using the approximation that

$$T_t + T_b \approx 2T_t \tag{9}$$

in equation (4) and substituting equation (8), we have

$$R_n = (4\epsilon\sigma T_t^3 + \frac{2k}{l})(T_t - T_b) \quad . \tag{10}$$

$$R_n = (4\epsilon\sigma T_t^3 + \frac{2k}{l})\frac{E}{BC} = gE \tag{11}$$

where g is the calibration constant which depends upon the temperature, emissivity, conductivity, and thickness of the thermal transducer.

Measurement of net radiation for meteorological purposes is more difficult because of the different wave lengths involved. Net radiation, for meteorological use, may be defined as

$$R_n = R_{su} - fRS_u + R_{sk} - fR_{sk} - R_{ea} \tag{12}$$

where R is radiation from the sun (su), the sky (sk), and the earth (ea) and f is the reflection coefficient of the earth. The wave lengths of the sun range from 0.3μ to 3μ and are approximated by blackbody radiation at 6,000 degrees K, while the wave lengths of sky and terrestrial radiation range from 3μ to 60μ and are approximated by blackbody radiation at 300 degrees K. In other words, the net radiometer must be equally sensitive to radiation from 0.3μ to 60μ.

The term involving thermal convection (3) may be eliminated or reduced by shielding the thermal transducer or by equalizing its effect on both surfaces. Until recently, there has been no material which is weatherproof and has acceptable transmission characteristics, so enclosing the thermal transducer to eliminate the thermal convection

term has not been feasible. Gier and Dunkle (2) have artifidally reduced the thermal convection term by directing a constant wind stream across the thermal transducer. To completely eliminate the effect of thermal convection, the wind stream must have equal velocities over both surfaces and T_t must be equal to T_b. The thermal convection term may be eliminated by enclosing the thermal transducer. The use of mica and vinylidene chloride for this purpose has been discussed by Fritschen (1).

EXPERIMENTAL METHODS AND RESULTS

The Gier and Dunkle type net radiometer (2) and the miniature net radiometer described by Fritschen (1) will be calibrated in a calibration chamber (Figure 1), which is a modified version of that described by Johnson (3). The source of short-wave radiation is a tungsten filament lamp. The peak emission of the tungsten filament is approximately 0.99μ. The calibration is accomplished using an Eppley pyrheliometer, Model 50, as a standard. The energy measured by the Eppley pyrheliometer is related to the output from the net radiometers. Since the Eppley is only sensitive to radiation of much longer wave lengths, glass is used to filter out the long-wave radiation from the surfaces of the lamp and the calibration chamber. Two glass filters are used on top and one glass filter is used on the bottom of the calibration area in the box. Two filters are used on top because the uppermost filter will absorb enough radiation to become heated and to reradiate long-wave radiation. The second upper glass filter will absorb the majority of the long-wave radiation from the top filter.

Any difference in radiation between the glass filters adjacent to the calibration area is corrected for in calibration.

The source of long-wave radiation is the interior walls of the calibration chamber. The interior of the calibration box has been lined with brass plates having copper coils fastened to the back of the plate. These plates are arranged so that the top half and the bottom half of the calibration chamber each contain five plates. Water of constant temperature is pumped through each half independently. Thermocouples have been cemented to each plate so that the plate temperatures can be obtained. A divider made of insulating material opaque to long-wave radiation is inserted between the halves of the calibration chamber. An opening or slot is cut in the divider to fit the sensing element of the radiometer. The divider prevents radiational flux between the halves of the calibration chamber except through the opening. The divider also eliminates convectional flux of energy. The radiational flux between the halves of the calibration chamber is computed from the following equation:

$$q = \epsilon A \sigma (T_1^4 - T_2^4) \quad ,$$

where q is the radiational flux, ϵ is the emissivity, A is the area, σ is Stefan-Boltzmann constant, and T is temperature, degrees absolute. The emissivity of the calibration chamber has been obtained by the <u>non-equilibrium method</u> (4) and has been found to be 0.952.

The miniature net radiometer has been modified to facilitate ease of construction and also, to decrease the reflection from the plastic

radiation windows at low sun angles. The details of the construction of the modified miniature net radiometer are shown in Figure 2. The polystyrene radiation windows have been hemispherically shaped to reduce the reflection of solar radiation at low sun angles. Polystyrene has been used in place of vinylidene chloride, as previously cited, because polystyrene has a much better transmission curve in the wave lengths of approximately 10μ. A thermal transducer was calibrated, both short- and long-wave radiational fields, with and without polystyrene radiation windows. The polystyrene radiation windows were found to decrease the output of the thermal transducer approximately 3.7% in a short-wave radiational field and approximately 5.1% in a long-wave radiational field. A typical calibration curve for a miniature net radiometer is shown in Figure 3. The fact that the experimental points for long-wave and short-wave calibration appear to fall on the same line indicate that the theoretical considerations of the calibration chamber are sound. In other words, the output of the miniature net radiometer and the radiant flux, as indicated by the Eppley pyrheliometer, agrees quite well with the output of the miniature net radiometer and the radiation calculated from the previous formula for long-wave radiation.

Limited research has been conducted on two Gier and Dunkle type net radiometers purchased from the Beckman and Whitley Company. The calibration factors obtained from the heat-flow transducers of the Gier and Dunkle type net radiometers were essentially the same as those supplied by the factory when the fan of the Gier and Dunkle type net radiometer was not running. However, quite different calibration factors were obtained when the fan was running. These differences

can be due to the unequal cooling effect of the fan on the top and bottom surfaces of the heat-flow transducer. This fact is pointed out in Figure 4. The data in Figure 3 were obtained when the Gier and Dunkle type net radiometer was placed in the calibration chamber with both halves of the calibration chamber having constant-temperature water approximately 20 degrees C. circulating through them. In other words, there was zero radiational flux applied to the Gier and Dunkle type net radiometer. The ambient temperature was varied from approximately 40 degrees F. to 110 degrees F. The output from the Gier and Dunkle type net radiometer is plotted versus the transducer temperature, which is an indication of the ambient temperature. When the ambient temperature is below the temperature of the radiational objects, in this case the upper and lower halves of the calibration chamber, the output from the net radiometer is positive; however, when the ambient temperature is above the temperature of the radiational objects, the output from the net radiometer is negative. In both cases the output from the net radiometer should be zero. It is not hard to imagine the effect that this unequal cooling of the heat-flow transducer by the fan of the Gier and Dunkle type net radiometer will have upon the net radiation measured in nature. Consider the case immediately after sundown when the actual net radiation is zero and also, consider varying ambient temperatures. It is not hard to imagine numerous cases of zero net radiation with different ambient temperatures. There appears to be no simple way to correct for the error caused by the unequal cooling of both sides of the heat-flow transducer by the fan except by redesigning the blower so that the air stream on both sides of the

heat-flow transducer is equal.

CONCLUSION

The calibration chamber appears to be adequate for periodical calibration of net radiometers. The modified version of the miniature net radiometer offers considerable promise in micrometeorological research.

REFERENCES

1. Fritschen, Leo J. Construction and calibration details of the thermal-transducer type net radiometer. Bul. of the Amer. Met. Soc. 41:180-183. 1960.
2. Gier, J. T. and Dunkle, R. V. Total hemispherical radiometers. AIEE Proceedings 70:1-7. 1951.
3. Johnson, D. S. Progress report on radiometer test. U. S. Weather Bureau, Unpublished mimeo. rpt., December, 1956.
4. Zemansky, Mark W. Heat and Thermodynamics. McGraw-Hill, New York. 1957.

PERSONNEL: Leo J. Fritschen

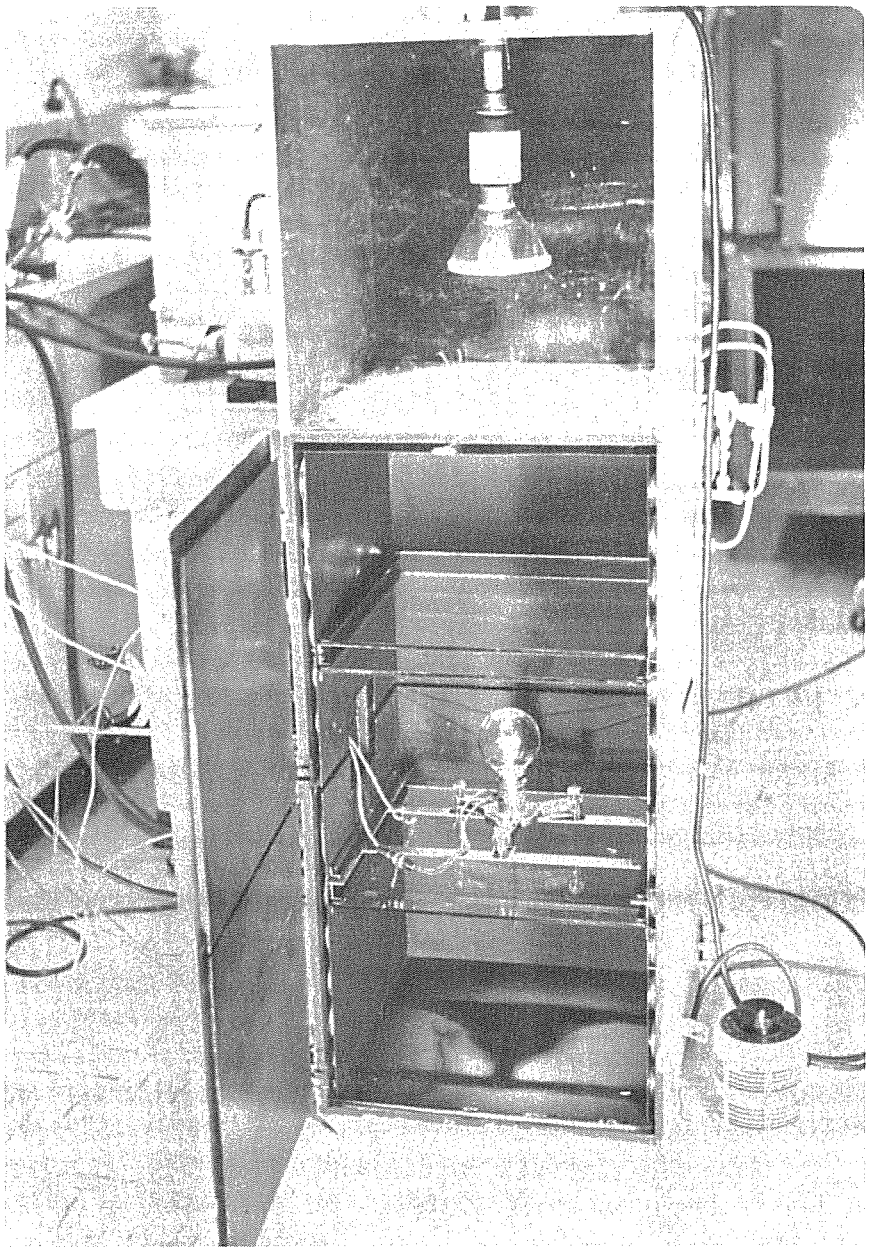

Figure 1. Net radiometer calibration chamber.

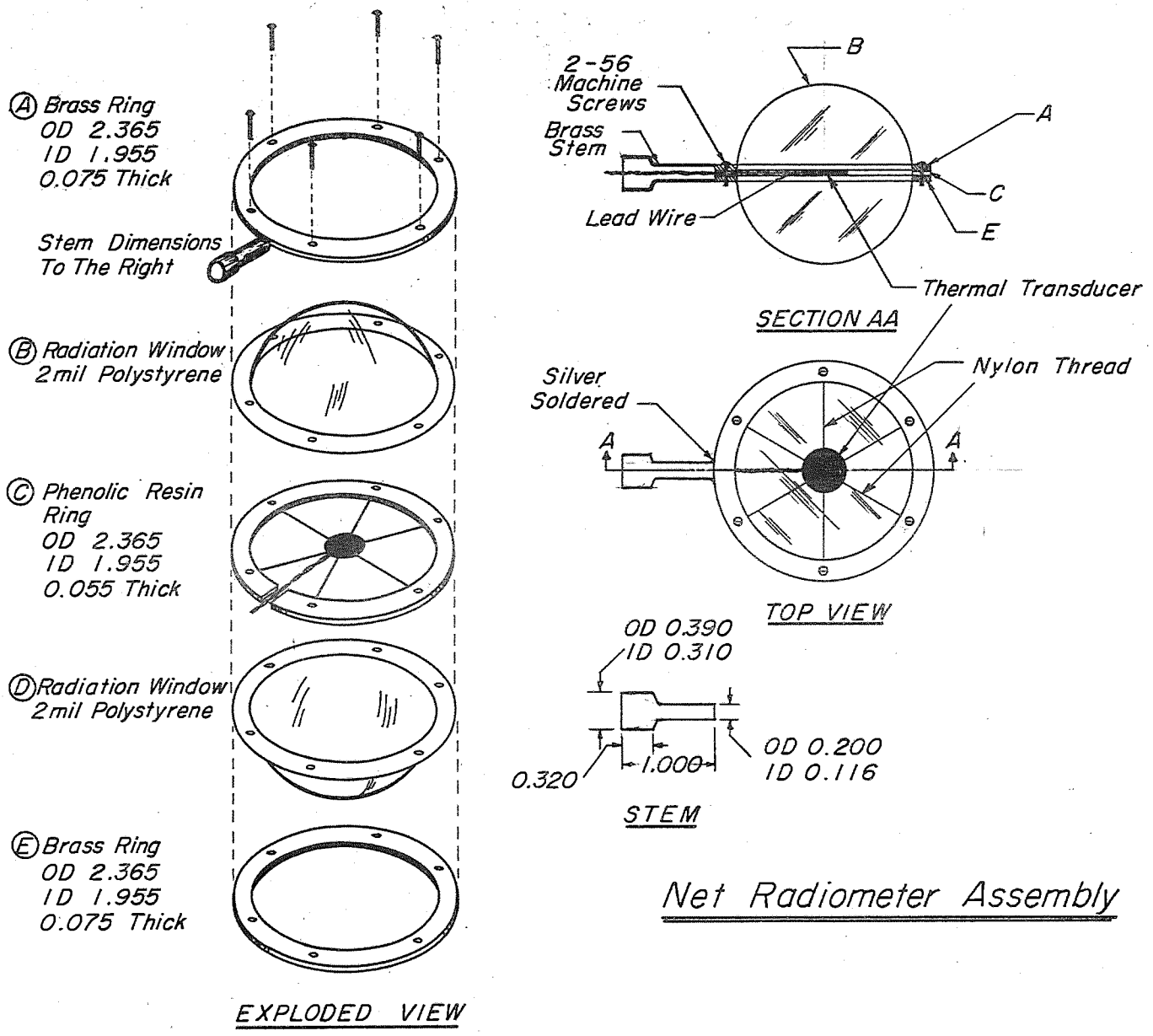

Figure 2. Construction details of the miniature net radiometer.

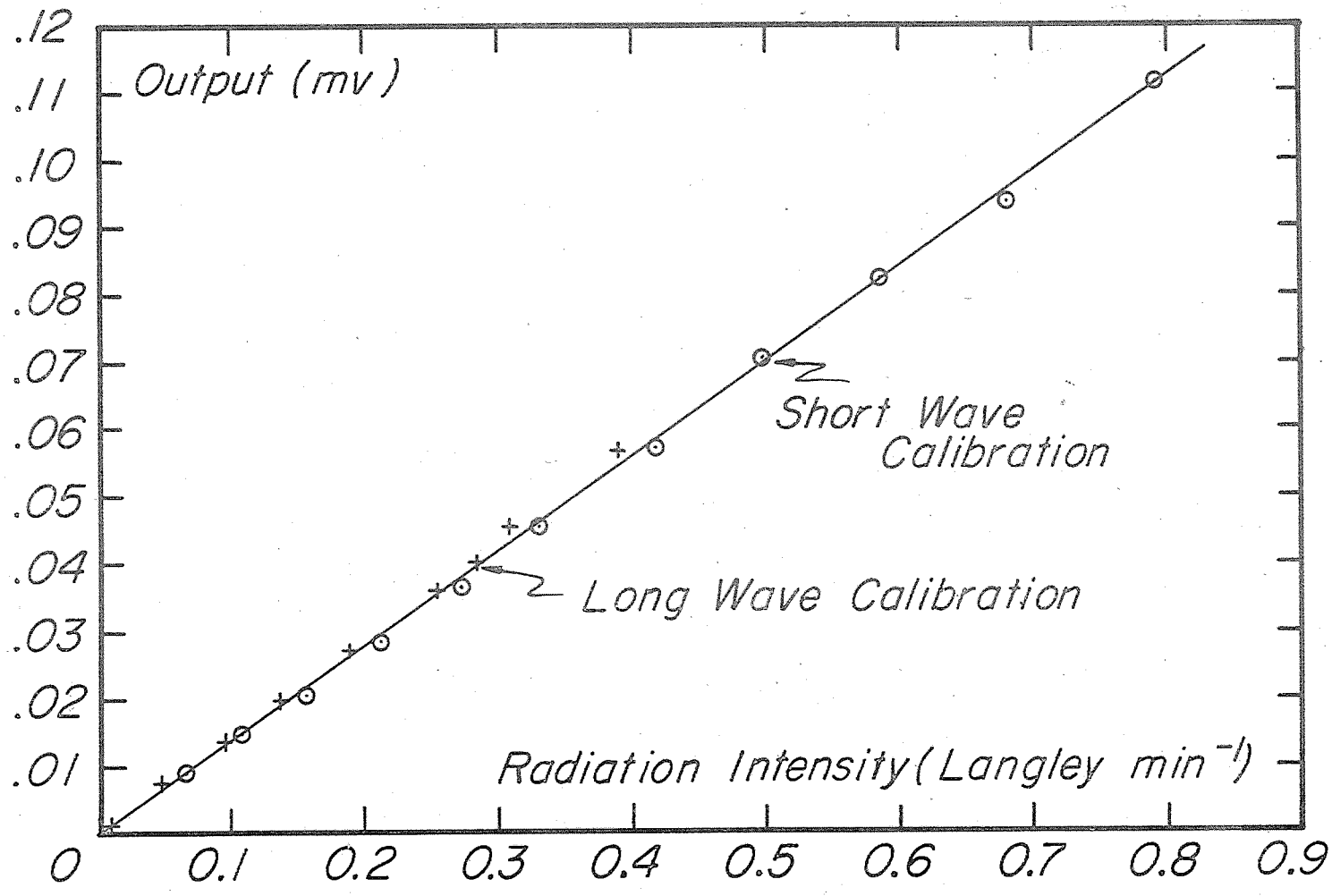

Figure 3. Calibration of a miniature net radiometer in short- and long-radiational fields.

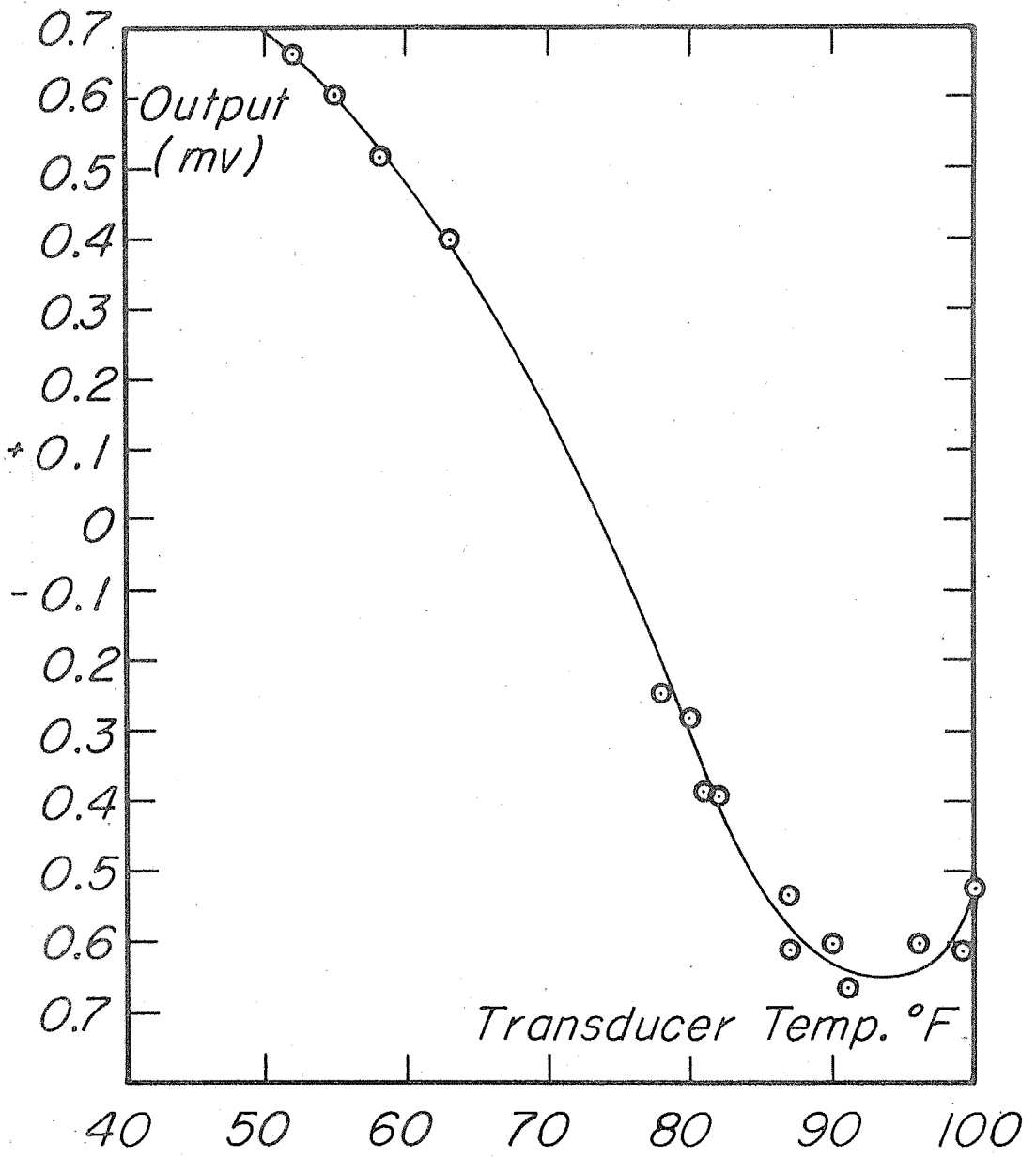

Figure 4. The effect of ambient temperature on the output of a Gier and Dunkle net radiometer with zero radiational flux.

TITLE: INSTALLATION AND PERFORMANCE OF ELECTRONIC WEIGHING LYSIMETERS

LINE PROJECT: SWC c13-1

PURPOSE OF INSTALLATION

The weighing lysimeter installation in Tempe is capable of automatically registering changes in soil moisture content with great precision and under natural conditions. This installation was designed and built to meet the following purposes:

1. To enable a detailed study of actual evaporation and transpiration from soil surfaces on which plants are growing.
2. To serve as an absolute check in studies of the relation between evaporation and meteorological conditions.
3. To obtain information on the total flow of water through the soil surface in studies of soil-water movement caused by evaporation.
4. To make comparative studies of certain treatments of soil or plant surfaces which may influence evaporation and transpiration.
5. To serve as a standard of comparison for the evaluation of methods designed to measure evaporation and transpiration such as, for example, the stem flow method or the polyethylene cover method.
6. To serve as an accurate standard of comparison for the evaluation of instruments designed to measure precipitation either in the form of rain or as dew.

The use of the lysimeter installation for purposes as listed above will be reported in the future under appropriate headings. The purpose of the present report is to give an account of the installation and of the performance of the lysimeters.

CHRONOLOGICAL REPORT

In the budget for fiscal year 1959 a specific item was set aside for the construction of lysimeters at the Southwest Water Conservation Laboratory. To facilitate fundamental studies of water use by evaporation and transpiration, it was decided to construct a high-precision set of weighing lysimeters of limited size. Therefore, in September 1958 work was immediately begun to design and procure such an installation. The design was completed for the purpose of obtaining comparative bids during the early part of 1958 and in June 1959 the bid was awarded to the Bytrex Corporation of Boston, Massachusetts. Detailed electrical and mechanical drawings were received in the fall of 1959 and approved by Laboratory personnel. Following this, construction was begun and virtually completed in April 1960. However, upon factory testing it was discovered that the specifications were not met in all respects and changes in the design had to be put into effect. In September 1960 delivery was made to the Laboratory site. In the meantime, footings and the necessary cable trenches and connections were provided at the Laboratory during 1960 and final installation under the supervision of the factory engineer took place in December of 1960. See Figure 1 for lysimeter location. This phase was completed without further difficulties and tests were run during the early part of January 1961 to verify calibration, sensitivity, and the effect of load distribution. These tests have been completed and approval has been indicated for acceptance of the installation from the supplier.

GENERAL DESIGN CONSIDERATIONS

The following items were considered as the basis for the lysimeter design:

1. The lysimeter should provide a normal rooting profile. This was interpreted as being a normally drained soil column of approximately 150 cm depth.
2. The lysimeters should be large enough to minimize the effect of the rims. It was felt that a 100 × 100 cm square lysimeter with thin steel rims, separated by no more than approximately 8 mm, would come close to meeting this requirement.
3. The installation should be in triplicate to provide at all times an estimate of the error of measurement.
4. The overall weight and construction of the installation should be such that it could be moved if so desired.
5. The weighing mechanism itself should be electronic and extremely compact so that the weight signal could be taken out by underground cable to an appropriate location for registration.
6. The registration of the weight should be automatic, continuous and in a form immediately usable for automatic data processing.
7. The sensitivity of the installation should be at least .05 mm (.002 of an inch).

BRIEF DESCRIPTION OF WEIGHING MECHANISM

The weighing mechanism can be considered to be composed of the following parts (refer to Figures 2 and 3):

1. The soil container, or lysimeter proper.
2. The platform carrying the soil container.

3. The counterweights.

4. The counterweight platform.

5. The beam.

6. The flexures which suspend the beam from the foundation and which suspend the soil container platform and the counterweight platform from the beam.

7. The load cell.

8. The metal enclosure protecting the above parts from the soil and from the atmosphere.

These items are described in further detail as follows:

1. The soil container has an area 100 × 100 cm and is 161 cm deep. It is made from 3.1 mm (11 gauge) steel and reinforced with horizontal ribs on the inside at approximately 30 cm distances. The empty weight of the container is about 380 kg and when filled with soil at a moisture content of approximately 30 percent by volume the total weight is approximately 3,110 kg. When the soil is at the 15 bar percentage the weight decreases to about 2,800 kg. The soil container is completely closed. In order to permit drainage of excess water, five stainless steel filters were laid on the bottom and connected by copper tubing to an outlet at the surface of the soil container to permit the application of a vacuum for establishing tension at the bottom of the soil column (see Figures 4, 5, and 6). The stainless steel filters are embedded in fine sand and the entire arrangement is covered with a one centimeter layer of glass beads. This provides for the establishment of tensions to a maximum of 200 mb at the bottom of the soil column.

2. The soil container platform consists of four heavy steel columns which support the soil container at the four corners. The steel columns are joined by heavy members transferring all the weight to a centrally located column which in turn is hung from the short end of the balance beam. Sideways movement of the platform is prevented by the installation of horizontal flexures which would be tensioned if any sideway forces would be applied to the platform.

3. The counterweights consist of cylindrical steel weights with a diameter of approximately 30 cm. A number of these are permanently installed and their weight is known only approximately. The remaining part of the weight is counterbalanced by counterweights which are 12 1/2 kg $\pm$ a few grams in weight. The number of these counterweights changes in accordance with the changes in weight of the soil.

4. The counterweight support platform consists of a single column broadened at the top which is in turn hung from the end of the beam in a manner similar to the soil container platform. Stops are provided at the counterweight end of the beam to prevent escessive movement.

5. The beam is made of a 20 cm steel "I" beam which is suspended from a yoke, which in turn rests on the foundation, by means of cross flexures.

6. The flexures are strips of spring steel about 0.040 inch thick having considerable strength in tension but resisting bending only slightly. Thus an almost frictionless suspension is achieved in which there is no possibility of change of mechanical advantage.

The flexures are bolted to the beam and the platform or supporting yoke, as the case may be.

7. The load cell is a strain gage pressure measuring device which is placed between the soil support platform and a plate which in turn is secured to the foundation. Thus, the load cell will be compressed whenever the counterweights exceed the weight of the soil container. The mechanical advantage of the beam is four and therefore the load cell senses four times the weight change, if any, which is created at the counterweight side. When soil container and counterweights are in perfect balance the load cell is free and the circuitry is adjusted so as to give a slightly negative output. This insures that the load cell is in good contact with the platform when a zero indication is given. The capacity of the load cell is approximately 50 kg and its indication is adjusted in the circuitry to give exactly this readout when a 50 kg weight is taken from the soil container after the above-mentioned zero adjustment has been made. By adjusting the number of 12 1/2 kg counterweights, therefore, the output of the load cell will always be between an indication of zero and 50 kg.

8. The enclosure consists of a hermetically sealed steel container which is sealed either by welding or by gasketing. Actually, this container consists of 3 parts as follows. A "coffin" which encases the weighing mechanism and through which the four soil platform support pins and the counterweight support pin protrude. Second, a casing for the soil container which, close to the surface, conforms closely to the latter so as to create an average clearance

of less than 8 mm. This gap is bridged by means of a very flexible rubber seal to exclude water and moisture. Finally, a similar casing surrounding the counterweights which casing extends also to the surface of the soil and is provided with an access door for the purpose of changing counterweights.

BRIEF DESCRIPTION OF THE RECORDING PART OF THE SYSTEM

The recording panel of the system consists of the following main parts (refer to Figure 7):

1. Power supply.
2. Input panels.
3. Digital clock and date input panel.
4. Controller.
5. Digitizer.
6. Strip chart recorder.

1. The power supply provides stabilized voltages to the various components and in particular a constant nine-volt DC supply to the load cells. This power is applied to the load cells at all times.
2. The input panels are provided with controls to regulate the power to the load cells in such a way as to give an output calibrated in units of weight or of digits. Furthermore, the input panel contains the information on the equivalent weight of the counterweights for each lysimeter. This information is to be dialed in by hand. Finally, the input panel connects the load cells to the measuring components of the digitizer when so instructed by the controller.
3. The digital clock and date input panel provides running information on the time of day and on the date. Furthermore, by appropriate

dial setting the clock will give the signal for an automatic measuring cycle to start. This can be done at every multiple of 5, 10, 15, 20, 30, or 60 minutes.

4. The controller causes the various phases of information retrieval and storage to proceed in the desired manner once a start signal has been given either manually or from the clock mentioned above. Once started, the controller interrogates the clock for the time information and then proceeds to interrogate the three lysimeters as to their number, the weight of the counterweights, and the live weight. As each bit of information is obtained it is stored in a tape by means of an automatic tape punch. All the information h having been obtained the controller shuts itself and the remainder of the system down after everything has been readied for the next cycle.

5. The digitizer receives the signal from the load cell after the proper connections have been created by a command from the controller through the lysimeter input panel. The signal from the load cell is, first, amplified by the digitizer and then a balancing signal is produced which corresponds to a particular angular position of a ten turn potentiometer. The balance position of the shaft is read out by means of four contact wheels for the four digits of the number which represents the load cell output. This number may vary from zero to 5000, each digit corresponding to 10 g.

6. The strip chart recorder receives its information from a transmitting potentiometer which is mounted on the digitizer. This signal is then translated into a position of the recorder slide

wire contact and mechanically coupled there to a print wheel mechanism. The recorder causes the weight to be printed out on the strip chart which moves a definite amount each time a switch is made from one channel to the next. The switching of lysimeter channels is done by the recorder. The information on the chart of the recorder serves primarily as a visual indication to see if all is well. Accurate evaluation of the weight must be done by resorting to the information stored on the tape. This information may be listed by means of an automatic typewriter or it can be directly converted to IBM cards with appropriate equipment.

LYSIMETER PERFORMANCE

Lysimeter performance can be described under the following categories:

1. Sensitivity, referring to the least weight changes that may be detected.
2. Accuracy or calibration, referring to the agreement between true and indicated weight changes.
3. The effect of load distribution.
4. External effects on indicated weight, primarily wind effects.

1. The sensitivity of the system proved to be considerably in excess of the specifications, which called for a sensitivity of 5 digits or 50 grams. This aspect was studies by means of adding or taking off small weights such as 20-, 50-, and 100-gram balance weights. It appears that the sensitivity of the system is somewhere between one and two digits or 10 or 20 grams (see Figure 8). This is

equivalent to a sensitivity between 0.0004 and 0.0008 inch or 0.01 to 0.02 mm. The weighing lysimeters appear to be more sensitive than any reported heretofore.

2. Since the end points of the calibration can be accurately set and maintained the accuracy depends on the linearity over the range from 0 to 50 kg. This was examined by placing large weights on the lysimeter after it had been zeroed in at both end points. It was found that the largest deviation from the true weight was 60 g and in most cases it was no more than 20 g. Thus, it appears that accurate changes of weight will be obtained over the entire range of the load cell. The movable counterweights having been made with considerable precision, the foregoing statement would apply to the entire range of measurement. The true weight of the soil is less easily ascertained owing to the fact that the permanent counterweights are not accurately weighed and also since the weight of the various components of the balance itself has not been precisely determined. Therefore, there is probably uncertainty of about 50 kg in the total weight of the system. However, the total weight itself is of no particular interest for most purposes. Rather it is the change in weight as a result of evaporation or precipitation which one wishes to study.

The estimated total weights, however, were very close to the predicted total weights on the basis of the known properties of the soil and the soil container is quite accurately known, probably to the nearest kilogram.

3. One of the problems in the lysimeter design was to eliminate any effect of changes in the load distribution as might result from unequal extraction of moisture with regard to the center of gravity of the lysimeter proper. Tests were carried out by moving a farily large weight from one corner of the lysimeter to the other and to the center. The change in weight caused by such changes in distribution of weight were not larger than two digits or 20 grams and are therefore considered insignificant.

4. The external effects have not been completely studied as yet. Indications are that with wind speed below 1.5 m sec^{-1} to 2.0 m sec^{-1} no serious disturbance to the measured weight results. At higher wind speeds, the system is in constant movement resulting in an uncertainty of several digits depending on the velocity and gustiness. It is evident that a certain amount of damping in the system is desirable and that the sensitivity may not necessarily be affected by the installation of additional damping. This problem is now under consideration.

PERSONNEL: C. H. M. van Bavel, R. J. Reginato

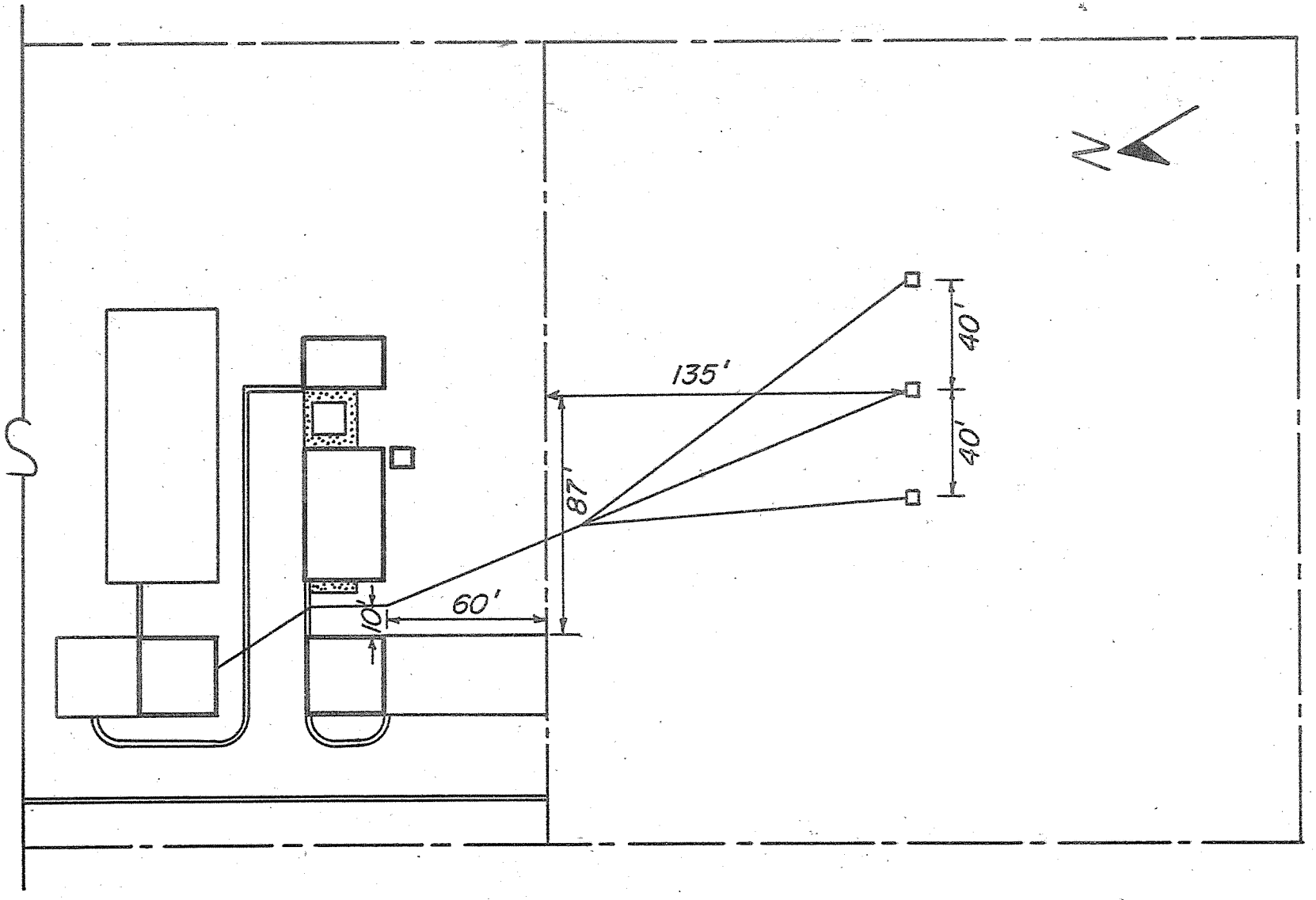

Location of Lysimeters

Figure 1. Location of lysimeters on Laboratory grounds.

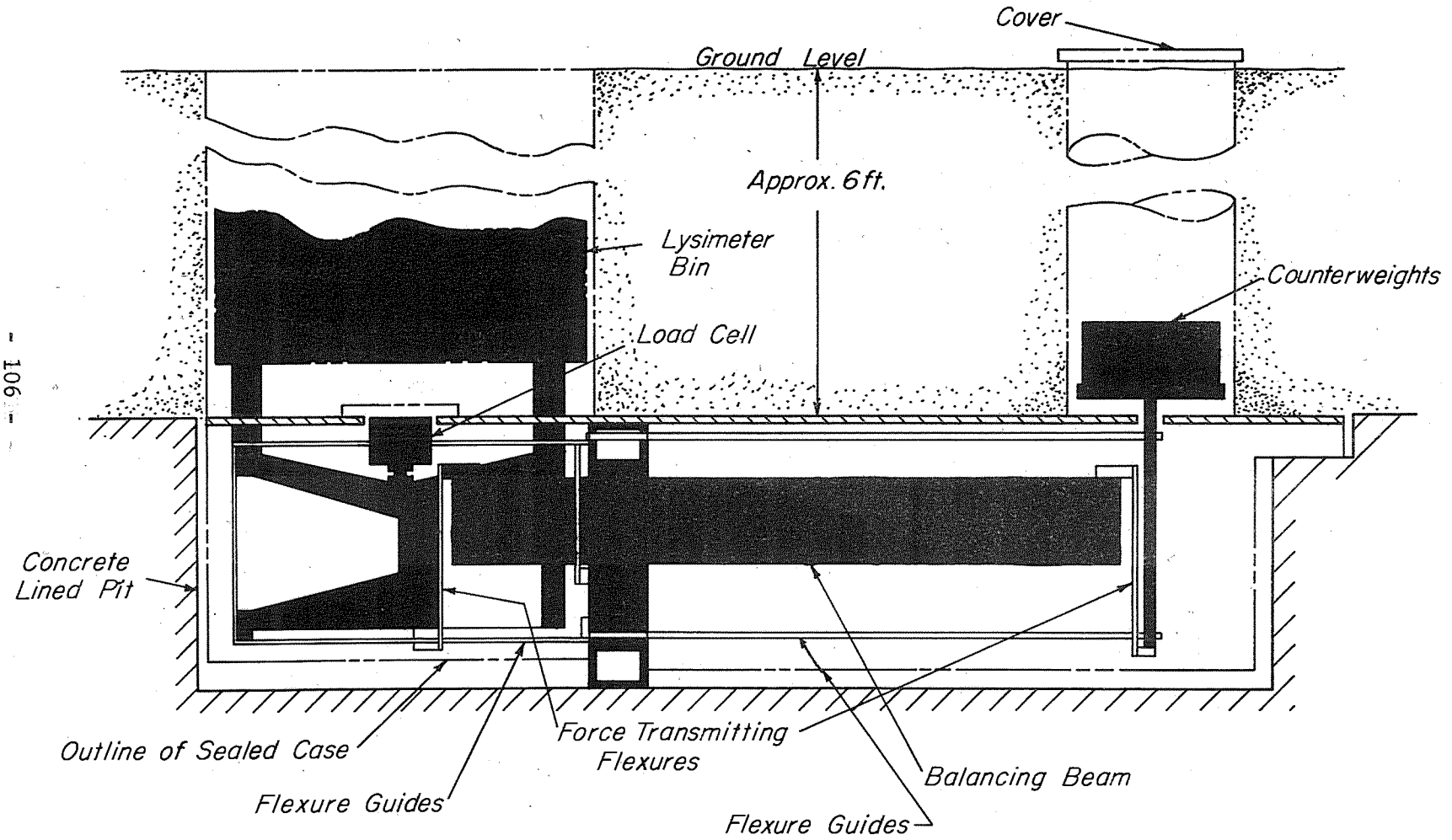

Figure 2. Schematic drawing of weighing mechanism of lysimeters.

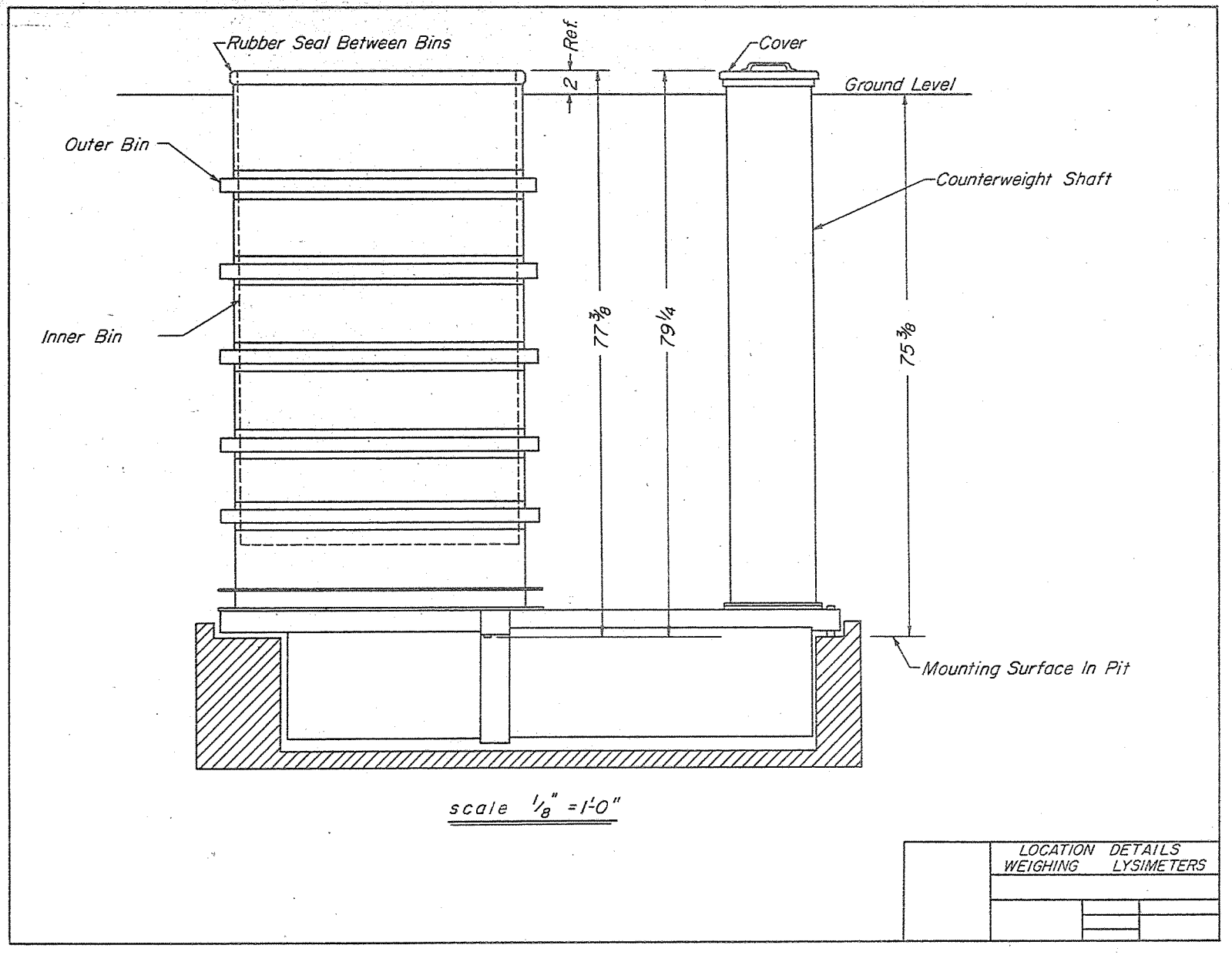

Figure 3. External view of lysimeter.

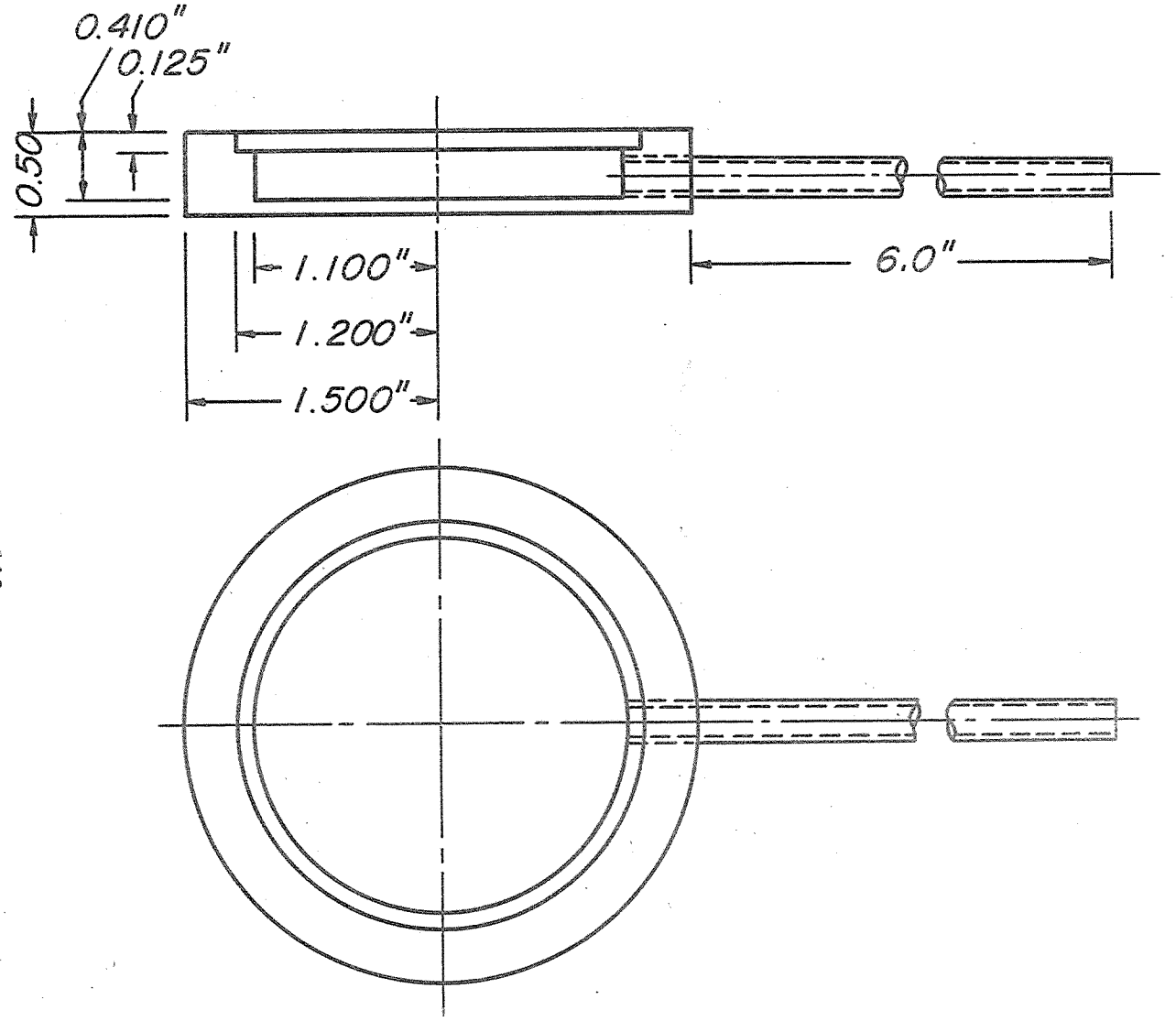

EXTRACTION CELL

Figure 4. Water extraction cell for lysimeter drainage.

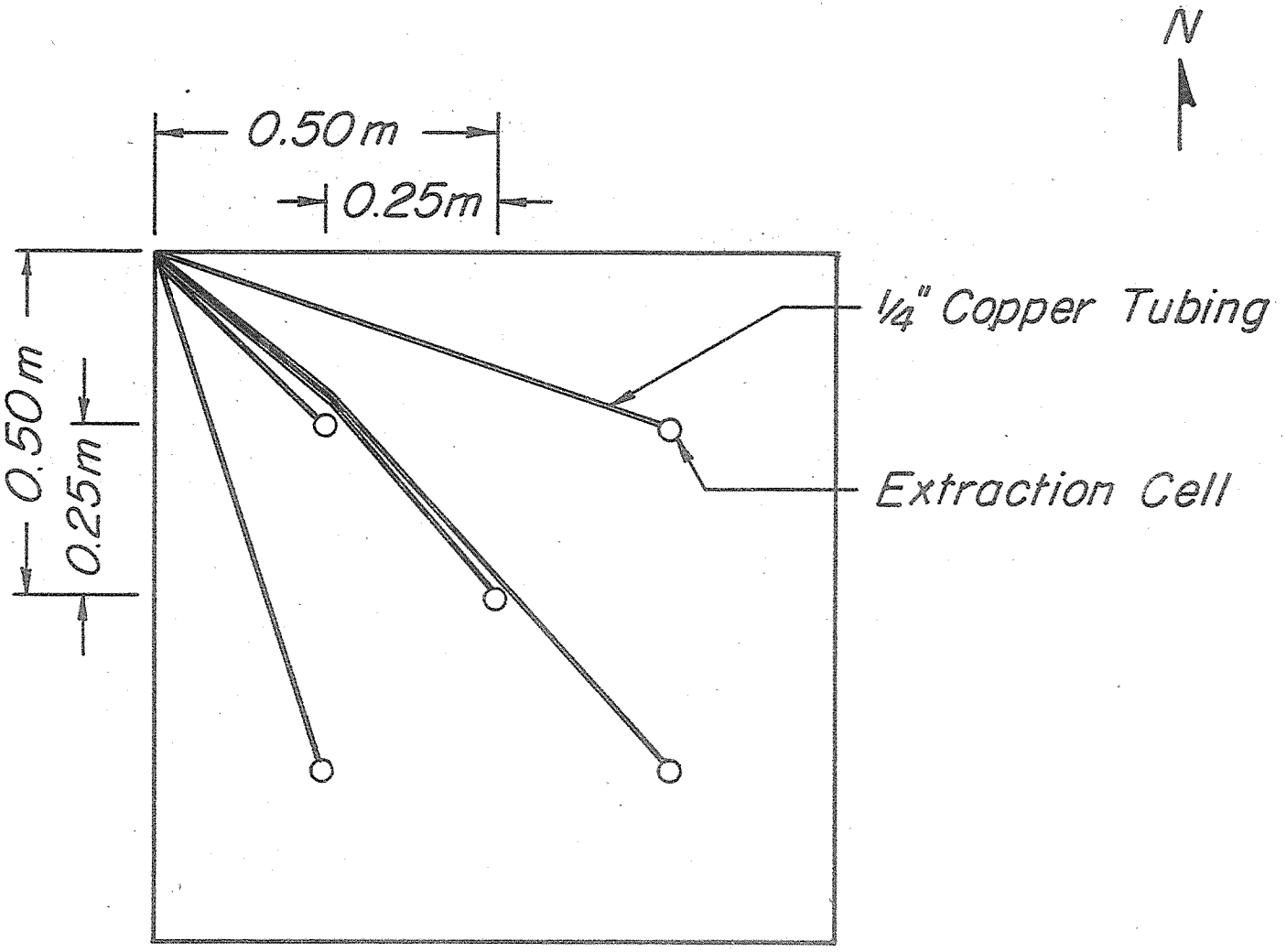

Figure 5. Location of water extraction cells on bottom of lysimeter.

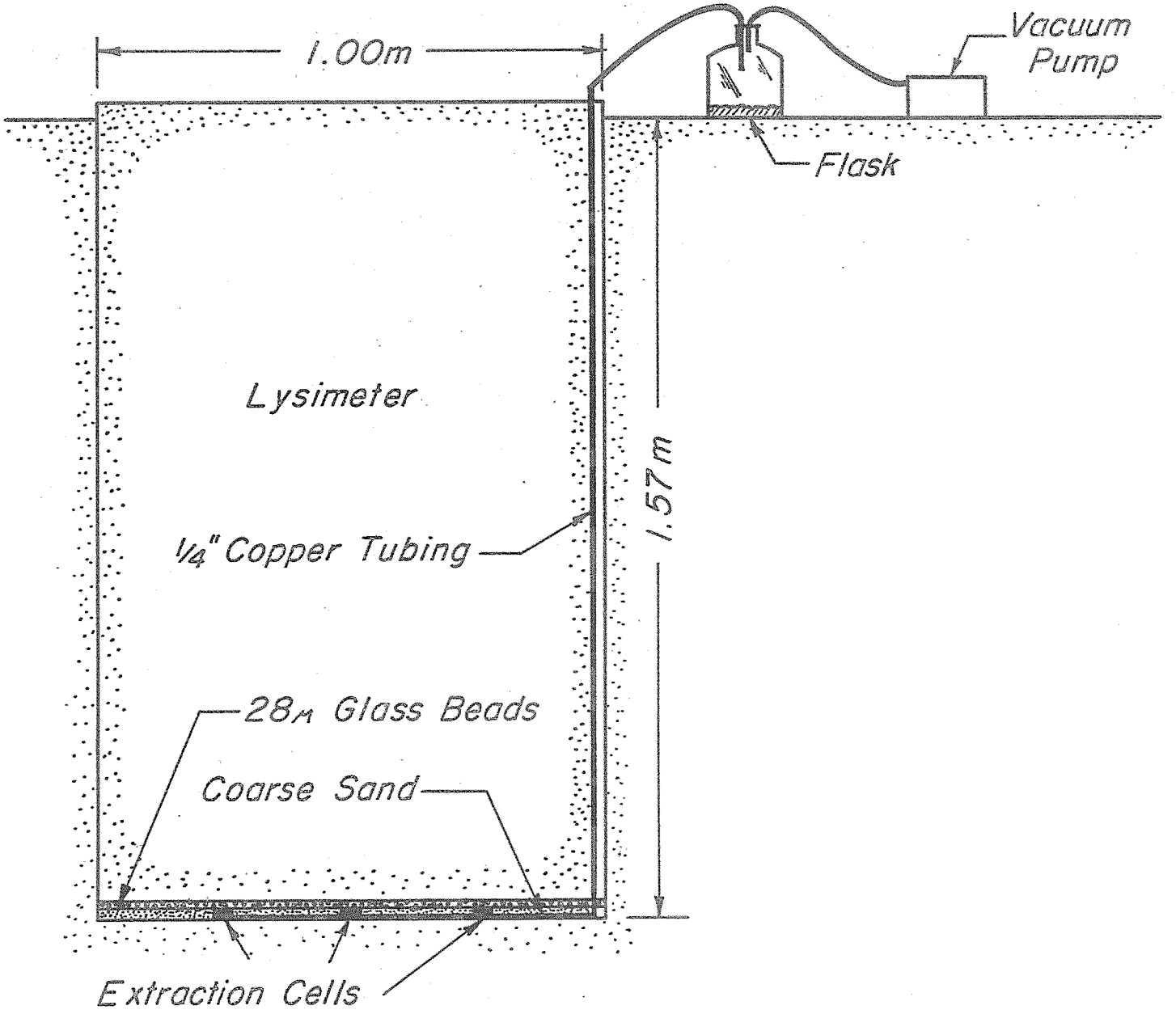

Figure 6. Method of using water extraction cells to provide regulated tension at bottom of lysimeters.

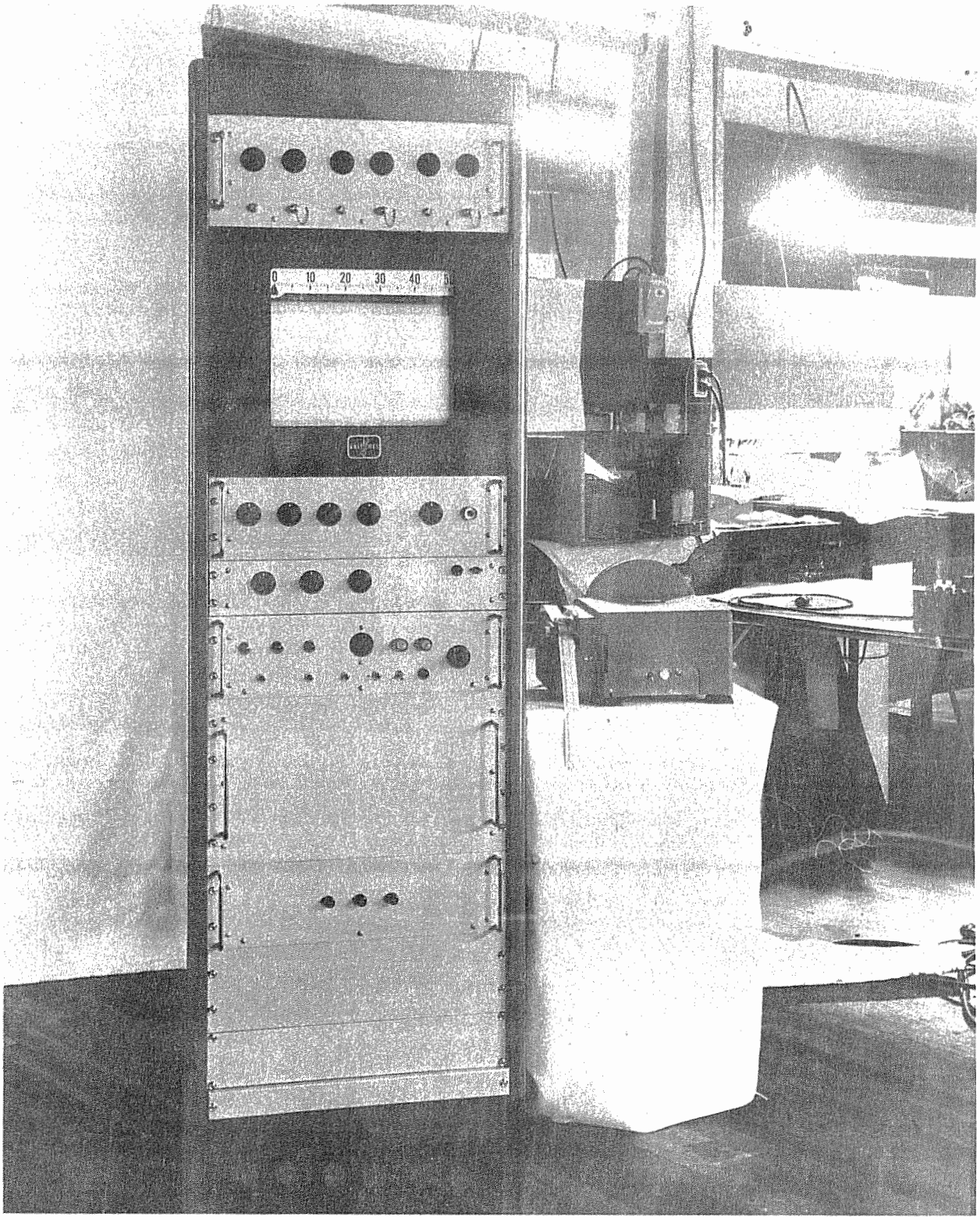

Figure 7. Recording console for weighing lysimeters.

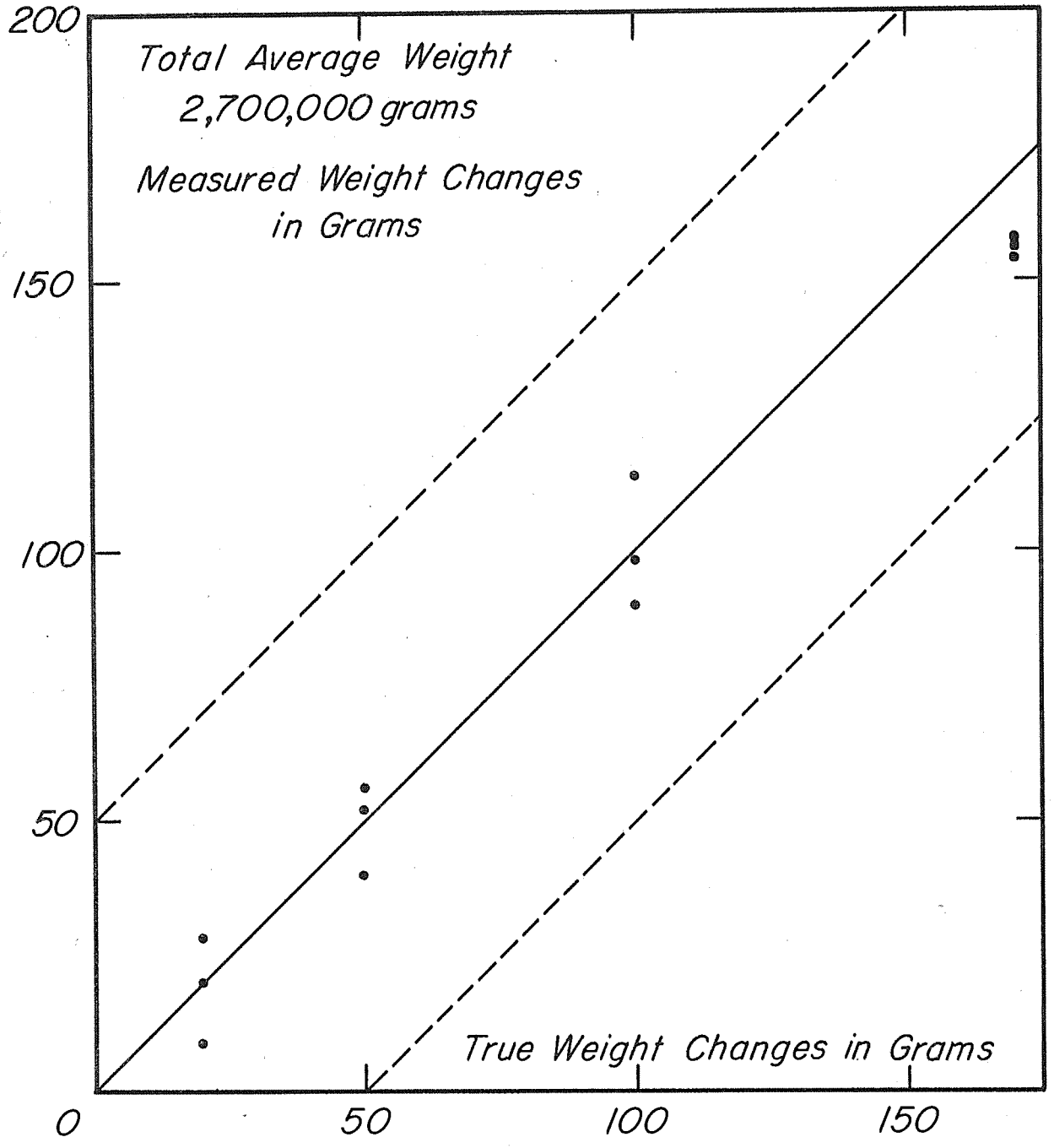

Figure 8. Sensitivity of lysimeters (data not identified by lysimeter number).

TITLE: MICROMETEOROLOGICAL DATA HANDLING SYSTEM

LINE PROJECT: SWC 13-1

INTRODUCTION

To efficiently study the fluxes of sensible and latent heat by the aerodynamic and energy budget methods, a data handling system is required which is capable of rapidly recording micrometeorological elements at specified intervals and presenting the data in a form suitable for machine calculations. To accomplish this, a data system was purchased from the Datex Corporation, which is capable of recording 40 different EMF or thermocouple inputs at a maximum rate of one input per second. This system was modified to record 4-unit digital inputs from six Veeder-Root counters.

DESCRIPTION OF THE MICROMETEOROLOGICAL DATA HANDLING SYSTEM

The micrometeorological data handling system (MDHS) consists of a self-balancing potentiometer (SBP) with shaft encoder, a storage translator, programmer, digital clock, light bank unit, four input selector modules, six electro-magnetic counters, typewriter and tape punch. The MDHS is shown in Figures 1 and 2.

The self-balancing potentiometer (Fig. 1,A) has three ranges: minus 1.0 mv. to plus 1.0 mv.; minus 0.2 mv. to plus 2.5 mv. with cold junction compensation for copper-constantan thermocouples; and minus 2 mv. to plus 18 mv. The accuracy of the SBP is $\pm$ 0.3 percent of full scale or 5 microvolts, whichever is greater. The sensitivity is $\pm$ 0.15 percent of full scale or $\pm$ 2.5 microvolts, whichever is greater. The full traverse and balance time is less than one second.

The shaft encoder has 2000 positions and is capable of translating the shaft position into a digital signal with an accuracy of ± one-half digit in 2000.

The over-all accuracy of the SBP and encoder amounts to six microvolts on the ± 1 mv. range. The accuracy of the system in terms of temperature measured with a single copper-constantan thermocouple is ± 0.14°C, the accuracy in terms of solar radiation measured with an Eppley pyrheliometer is ± 0.007 langley min^{-1}, and the accuracy in terms of net radiation measured with a single miniature net radiometer is ± 0.03 langley min^{-1}.

The translator (Fig. 1,I) translates the encoder data into 4-digit decimal form which is displayed in the light bank unit (Fig. 1,C).

Each of the four input selector modules (Fig. 1,E,F,G, and H) provides facilities to automatically or manually select any of its ten input channels. The modules contain a dial indicator to display the point that has been selected. In addition, each module contains a by-pass switch so that the module may be by-passed from the data recording cycle. With the by-pass switches, the number of input variables to be recorded may be selected in groups of ten.

The programmer (Fig. 1,D) controls the advancing of the input selector module, storage and clearing of encoder data, and will sequentially present the digital data in a specified format for print-out. Any one of the 40 channels may be programmed to any of the 3 ranges by a plugboard arrangement.

The MDHS contains a digital clock (Fig. 1,B) arranged to provide a digital output of days - 0 to 31, hours - 0 to 23, and minutes - 0 to 59. The digital clock contains switches for month input and recording cycle. The digital clock automatically initiates a data recording cycle at 5-, 15-, 30- or 60-minute intervals as selected.

An addition (Fig. 2,C) was made to the Datex System to facilitate the recording of wind speed. This addition consisted of six electromagnetic counters mounted in a relay rack. The Veeder-Root electromagnetic counters have electrical readout and electrical reset. The counters were rewired to operate at 6 VDC which is the rating of the anemometer contacts.

The counter system has been interconnected to the Datex System. With the interconnection, the action of the counters (which are visually displayed) can be recorded in digital form at selected intervals. After the counters have been recorded, they are reset to zero and the counting action started again.

The counters are capable of 1000 counts per minute (78 mph), which far exceeds the rating of the anemometers being used.

The 6 VDC current for the counters is supplied by a Model D-612T filtered D.C. power supply (Fig. 2,B), which has a continuous rating of 10 amperes.

The MDHS is arranged so that the output from the programmer can be fed into a motorized tape punch (Fig. 2,A), an automatic typewriter, or

both simultaneously, as selected. The punch paper tape format is 046-047 and can be readily converted to IBM cards.

The record cycle can be initiated automatically or manually as selected and any single channel may be manually displayed or recorded. When the record cycle is initiated, the MDHS will first record the date-time group (month, day, hours and minutes); then will sequentially record the point identification and magnitude of each of the 40 channels, in groups of 10 as selected, and will record the 6 electromagnetic counters. The channels are interrogated at the rate of one per second, while the complete recording cycle is completed in one minute. A sample of the print-out of 40 channels and 5 counters is shown in Figure 3. The 40 channels are printed in terms of 2000 counts full scale and must be referred to the proper range for EMF or temperature value. (i.e., channels 02 and 09, 01261600, indicate zero EMF on the $\pm$ 1 mv. and -2 to +18 mv. ranges, respectively, while channel 06 is indicating the system temperature of 84.1° F.)

INPUT CABLE ARRANGEMENT

The micrometeorological observations will be made in the experimental field approximately 250 feet from the building in which the data system is installed. Four cables, buried at a 4-foot level, are used to conduct the signal to the system. The cables consist of: one 15-pair shielded thermocouple cable; two 16-pair copper wire cables with each pair individually shielded; and one 26-pair shielded copper wire cable. The cables with the exception of the thermocouple cable are terminated in junction boxes utilizing Cinch-Jones terminal strips. The thermocouple cable is terminated in a junction box in the experimental field

utilizing three 5-thermocouple panels. The other end of the thermocouple cable is attached directly to the input selector modules.

SUMMARY

The MDHS is a system that (1) can efficiently transform various inputs into punch tape or data sheets, (2) is very flexible with regard to the number and magnitude of inputs to be recorded, and (3) seems to require very little maintenance to maintain an operational status.

PERSONNEL: L. J. Fritschen and C.H.M. van Bavel.

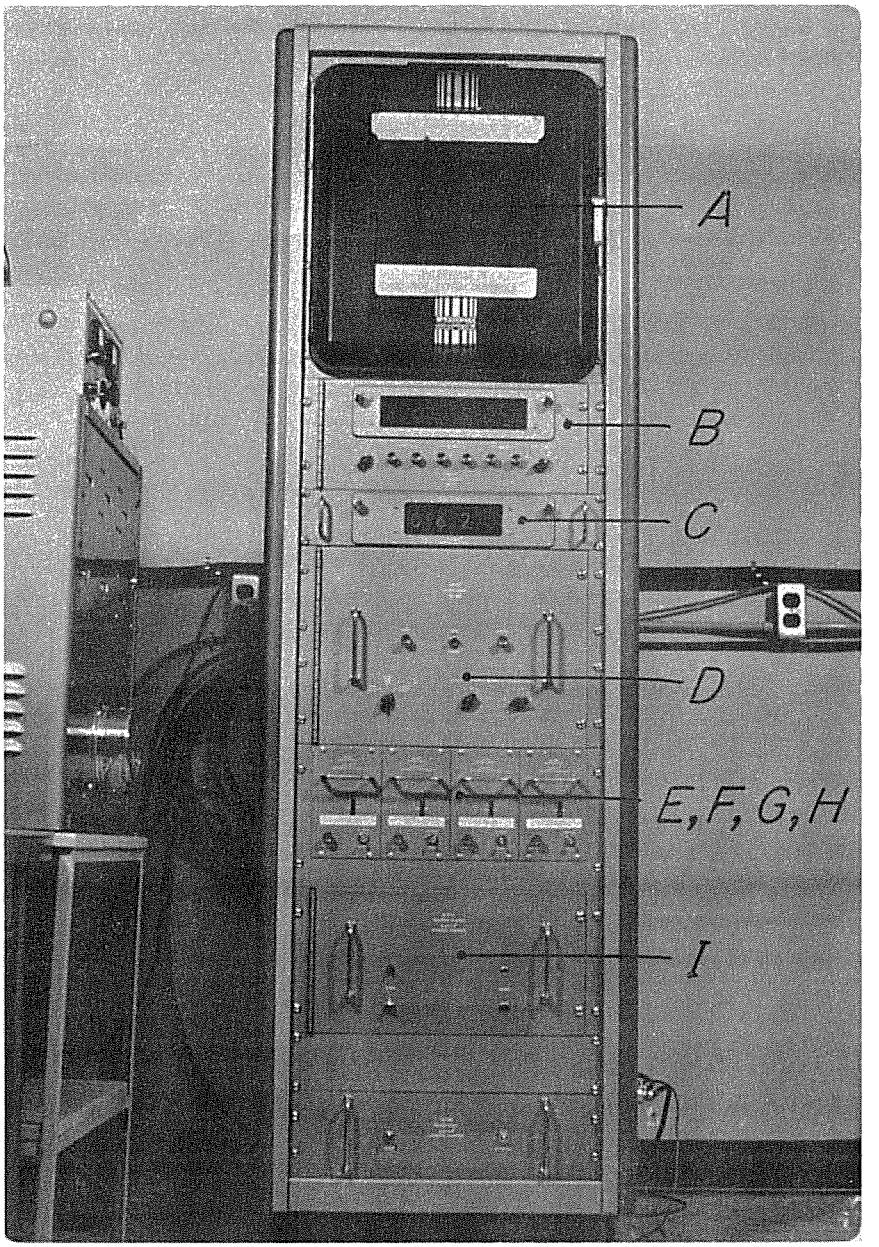

Figure 1. Datex system.

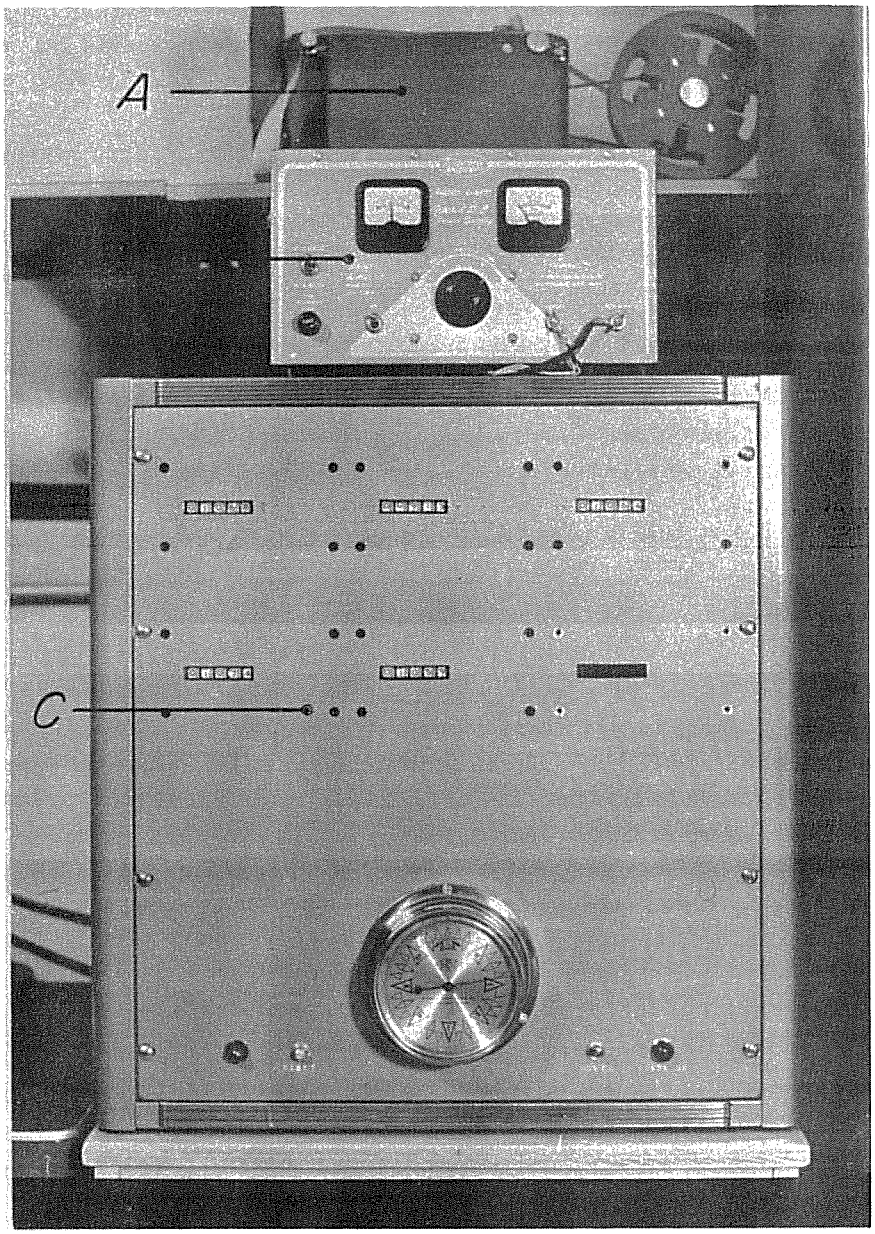

Figure 2. Counter system.

```
01261600 01 0996 02 1001 03 1000 04 0997 05 0994 06 1002 07 0197 08 0196 09 0198 10 1002
01261600 11 1138 12 1132 13 1000 14 1002 15 1002 16 1001 17 1001 18 1001 19 1000 20 1040
01261600 21 0554 22 0546 23 0539 24 0533 25 0527 26 0521 27 0515 28 0509 29 0505 30 0498
01261600 31 0492 32 0486 33 0198 34 0198 35 0198 36 0197 37 0198 38 0198 39 0197 40 0191
01261600 41 2260 42 1693 43 2250 44 2296 45 2355

01261700 01 0996 02 1006 03 1002 04 1000 05 1001 06 1003 07 0198 08 0194 09 0198 10 0998
01261700 11 1156 12 1152 13 1002 14 1002 15 1000 16 1002 17 1001 18 1002 19 1006 20 0934
01261700 21 0513 22 0506 23 0499 24 0492 25 0484 26 0478 27 0472 28 0466 29 0459 30 0454
01261700 31 0447 32 0441 33 0198 34 0198 35 0197 36 0198 37 0190 38 0197 39 0197 40 0194
01261700 41 1007 42 0699 43 1036 44 1058 45 1109

01261800 01 1006 02 0995 03 1005 04 1004 05 1004 06 1008 07 0198 08 0193 09 0198 10 0998
01261800 11 1204 12 1196 13 1008 14 1006 15 1006 16 1005 17 1005 18 1005 19 1004 20 1032
01261800 21 0585 22 0577 23 0570 24 0564 25 0556 26 0552 27 0546 28 0539 29 0534 30 0528
01261800 31 0521 32 0516 33 0198 34 0198 35 0198 36 0198 37 0189 38 0197 39 0197 40 0194
01261800 41 1271 42 0935 43 1278 44 1325 45 1302
```

Figure 3. Sample print-out of the micrometeorological data-handling system.

TITLE: DEVELOPMENT AND TESTING OF METHODS TO MEASURE THE MOISTURE CONTENT OF THE AIR IN ARID CLIMATES.

LINE PROJECT: SWC c13-1

INTRODUCTION

In conjunction with research on evapotranspiration and particularly in applying the aerodynamic or mass transfer approach to such problems it is necessary to establish the air humidity profile over the area under investigation. Traditionally, these measurements are made with wet and dry bulb thermometers of some kind or other. In arid climates where radiation intensity is great, unusual difficulties are encountered. These difficulties consist of the following:

1. The effect of radiation on the indications from whichever type thermometer is being used is large. Elaborate shielding and ventilation may overcome this difficulty.
2. Maintaining a sufficient flow of pure water at all times to the wet bulb is not simple. With high temperatures and low vapor pressures the amount of evaporation from the wet bulb is considerable and one can not always be sure that the wet bulb temperature is not determined by the availability of water to it.
3. The air being often dusty, the contamination of the exposed wet bulb may result in wet bulb temperatures that are higher than they should be.
4. In view of the large depression of the wet bulb with regard to the dry bulb there is a considerable flow of heat from the warmer parts of the equipment to the wet bulb itself through the thermometer stem or through the wire if a thermocouple or thermistor is

being used. This may not be an important factor if the precision of measurement is of the order of one degree but if, for example, a precision of measurement of .01 degree is required, as is the case in accurate profile studies, the conduction of heat to the wet bulb becomes a serious problem.

In view of the above it was decided ordinary wet and dry bulb thermometry would not be satisfactory for the purpose at hand and during 1960 several inquiries were made into other types of equipment that might be suitable for the purpose of measuring the air humidity profile. The following methods were looked into:

1. Analysis of the air at a remote location by means of an infrared analyzer.
2. Measurement of the relative humidity of the air at a remote location by means of lithium chloride resistance elements.
3. Measurement of the absolute humidity of the air by means of wet and dry bulb psychrometry at a remote location and at a controlled temperature.

INFRARED ANALYZER

Measurement of the moisture content of a gas, including air, may be done by means of the absorption of infrared radiation by the gas mixture. To this end an infrared gas analyzer was obtained from Mine Safety Appliances Company (Lira Model 200). In this instrument the gas mixture is being passed through a small cell with calcium fluoride windows. The attenuation of a beam of infrared radiation emitted by a glowing hot wire is being measured by comparing it with a standard

beam. The instrument procured had a range from zero to 3 percent water vapor by volume. This would correspond to a range of zero to approximately 30 millibars of water vapor pressure.

The instrument has a rated accuracy of about 2 percent, which in itself is not sufficient to distinguish between moisture content at different elevations in a profile study. Since the instrument does not provide an absolute measurement it must be calibrated by passing a completely dry gas and a gas of known vapor content through the analyzer at repeated occasions. It was found that the zero adjustment could be reproduced reasonably well although it took a considerable amount of time before the last traces of moisture were swept out of the apparatus and the associated tubing. The zero setting was found to be stable with time and therefore the adjustment was considered to be no problem.

A different experience was had with regard to the adjustment of the span. In the first place it is difficult to prepare a flowing mixture of water vapor and air of known composition with a precision of, say 0.3 mb water vapor pressure. It was found that the span adjustment could not be replicated from one run to the next in spite of extreme precautions with regard to the operation of the equipment. These included working in a constant temperature room, desiccation of the cabinet interior, use of copper tubing throughout, and so forth.

It was decided that this equipment could not be used in any long time studies of moisture content of air where it is of the first importance that the measuring equipment itself is stable with time and can be verified without excessive difficulty.

LITHIUM CHLORIDE RESISTANCE ELEMENTS

An investigation was conducted of the suitability of lithium chloride resistance cells as available from American Instrument Company for the purpose of measuring the relative humidity of air at remote locations. Obvious advantages of lithium chloride resistance cells are a relatively low cost, small size, and simplicity in operation. It was found by laboratory tests and field checks that narrow-range (span of 10 to 15% relative humidity) elements performed quite well within the specifications furnished. They can, therefore, be used to measure the changes in the relative humidity of the air to, perhaps, the nearest 1/2 percent. This precision, however, would not be considered suitable for moisture profile work. Attempts to calibrate commercially available lithium chloride resistance elements more precisely have not been successful. This is owing to slow changes or drift in the element output, presumably related to the diffusion of water in and out of the this layer of lithium chloride solution, and to the above-mentioned difficulty of preparing water-air mixtures of precisely known composition.

On the basis of these tests it was concluded that lithium chloride elements can be useful in establishing the gross value of relative humidity and for the purpose of following such changes with time when fluctuations are rapid. It was found that the time constant of these elements was of the order of 0.4 minute provided the ventilation rates were high enough. If ventilation rate is limiting the time constant may go up as high as 1 1/2 minutes. On the other hand, for accurate profile work it does not seem as if lithium chloride elements have sufficient precision.

PRECISION PSYCHROMETRY

In view of the foregoing it was decided to go back to the time-honored wet and dry bulb psychrometry since, in this case, a theoretical relationship predicts the relative humidity from the observed values and it is not necessary to resort to calibration.

Somewhat similar to proposals made by others in the past, the measurement of the wet and dry bulb temperatures is made by means of fine thermocouples, the output of which can be measured and recorded without difficulty. An important change over previously used techniques is that present plans are to sample the air by means of a sampling tube and thermostating the air within .01 degree at a known temperature. In this way the relative humidity may be increased by cooling the air to a value where the problems encountered with psychrometry in the open are eliminated. Apparatus for carrying out these studies is now under construction and no report can be made on the suitability of the equipment now being designed.

There is a distinct advantage in sampling the air by means of aspiration tubes. When measurements are made of moisture content of the air at a particular point, one encounters extreme fluctuation over very short periods of time. In the usual mass transfer approach one is not interested in these fluctuations but rather in an average pertaining to periods of time of 5 or 10 minutes or more. By sampling the air and mixing it in a suitable container the averaging is done mechanically and a simple measurement on the mixture provides the estimate of the average moisture content of the air which one is looking for.

PERSONNEL: C. H. M. van Bavel, R. J. Reginato

TITLE: THE MEASUREMENT OF WATER TRANSPORT IN COMPLEX TUBES WITH SPECIFIC APPLICATION TO THE ASSESSMENT OF SOIL-WATER LOSSES BY TRANSPIRATION

LINE PROJECT NO.: SWC c13-1 CODE NO.: Ariz.-WCL-5

INTRODUCTION

The objective of this project is to develop a rapid, non-destructive method of measuring water transport in plants for the purposes of assessing soil-water losses that are a result of plant transpiration.

A direct and rapid method of measuring water transport, and therefore transpiration in plants, which does not interfere with the plant environment nor is destructive to the plant, is needed to enable separate assessment of evaporation and transpiration processes, and hence contribute to a better understanding of the evapo-transpiration phenomenon.

Attempts have been made to measure transpiration of plants by covering the soil with plastic, with the plants protruding from holes in the plastic. This procedure disturbs the microclimate and, in some cases, does not completely stop evaporation. Both factors could cause errors in the transpiration measurements. Decker and Wetzel (1957) presented an improved vapor-production method of measuring transpiration. This method involves covering the plant or plants and measuring changes in relative humidity.

The thermoelectric method offers promise of determining water transport in plants without disturbing the plant environment. This method has been used by Bloodworth, et al. (1955, 1956), on cotton plants and by Marshall (1958) on conifers to determine the velocity of sap

flow through plant stems. Their results have shown that data obtained by the thermoelectric method are indicative of transpiration rates. Marshall (1958) has shown that the time of maximum temperature rise at a known distance from the heater is not necessarily indicative of the sap velocity, as was assumed by Bloodworth, et al. Marshall obtained a mathematical expression for the sap velocity which included diffusion effects by assuming certain boundary conditions. His mathematical treatment is interesting and pertinent but is valid only on conifers and using his technique.

METHOD

Previously, the heat source for the thermoelectric method has been resistance wire. The wire was either wrapped partly or all around the stem or inserted as a probe into the stem. The present investigation proposes using a radio-frequency generator as a heat source. This will allow a thin cross section to be heated almost instantaneously and uniformly throughout, essentially creating an instantaneous plane source of heat, which considerably simplifies the mathematical boundary conditions.

PROGRESS

The work performed to date has been the procurement and assembly of equipment and supplies, calibration of thermistors, selection of matched pairs of thermistors, and a theoretical development of heat flow in a moving medium. Since the project has just recently been initiated, no experimental work has been performed; hence, only some theoretical developments will be given in this report.

When mathematics is used to describe phenomena in biological

systems, many simplifying assumptions must be made in order to make the mathematics tractable. In many cases, such assumptions are not too restricting and mathematics can be used to describe some systems quite well. The case of measuring the velocity of liquid moving in a pipe, or the more complex case of sap flow in a plant stem, by introducing heat at one point or plane and measuring the temperature rise at a point a given distance away, can be treated by the theory of moving sources of heat.

Consider a tube through which liquid is moving with velocity U. If an instantaneous plane source of strength Q is created at the plane $x = 0$ (the x coordinate is parallel to the flow), then the temperature distribution is given by

$$v = \frac{Q}{2(\pi kt)^{1/2}} \exp[-(x - Ut)^2/4kt] \ , \qquad [1]$$

where v is the temperature, k the thermal diffusivity of the liquid, t the time, U the velocity, x the distance coordinate.

If $U \neq 0$, then the heat pulse will move along the x axis, the direction depending upon the sign of U. At a given x the temperature will rise to a maximum and subsequently, decrease. The time at which this maximum occurs is found by differentiating equation [1] with respect to time and equating the result to zero. The resulting expression allows the velocity of flow to be calculated if the time of maximum temperature rise t_m is known. The expression is

$$U = \frac{1}{t_m}(x^2 - 2kt_m)^{1/2} \quad . \qquad [2]$$

If the effective cross-sectional area A of the flow tube is known, the quantity of flow per unit time Q is

$$Q = AU = \frac{A}{t_m}(x^2 - 2kt_m)^{1/2} \quad . \qquad [3]$$

Equations [2] and [3] show that the effect of thermal diffusion cannot be neglected, especially at low velocities and short distances from the heat source.

Another way of obtaining the velocity of flow is by measuring the temperature at two points equidistant from the heat source, one upstream and one downstream, say at x and -x. The temperature difference at time t_m is then

$$\Delta v_1 = \frac{Q}{2(\pi k t_1)^{1/2}}\left\{\exp[-(x - Ut_1)^2/4kt_1] - \exp[-(-x - Ut_1)^2/4kt_1]\right\}$$

$$= \frac{Q}{(\pi k t_1)^{1/2}} \exp[-(x^2 + U^2 t_1^{\,2})/4kt_1] \sinh \frac{Ux}{2k} \quad . \qquad [4]$$

A similar expression is obtained for time t_2. The temperature difference at time t_1 is divided by the difference at t_2 to obtain

$$\frac{\Delta v_1}{\Delta v_2} = (t_2/t_1)^{1/2} \exp\left[-(x^2 + U^2 t_1^{\,2})/4kt_1 + (x^2 + U^2 t_2^{\,2})/4kt_2\right], \quad [5]$$

or

$$4k \ln\left[\frac{\Delta v_1}{\Delta v_2}\left(\frac{t_1}{t_2}\right)^{1/2}\right] = U^2(t_2 - t_1) + x^2\left(\frac{1}{t_2} - \frac{1}{t_1}\right) . \quad [6]$$

Consequently, the velocity is

$$U = \left\{\frac{4k}{(t_2 - t_1)} \ln\left[\frac{\Delta v_1}{\Delta v_2}\left(\frac{t_1}{t_2}\right)^{1/2}\right] - \frac{x^2}{t_1 t_2}\right\}^{1/2} . \quad [7]$$

Equation [7] has an advantage over equation [2] in that the temperature differences can be obtained at three or four times; hence, two simultaneous equations can be solved for both U and k. In equation [2], k must be obtained from another source.

The above development is applicable to bundles of very thin-walled tubes within which fluid is moving. If a cross section of a conifer was heated with a dielectric heating apparatus and temperature sensors were located within the tracheids (see Marshall 1958), equations [1] through [7] are applicable.

For the case of heating a plant stem dielectrically and measuring the time of maximum temperature rise at a point on the outer portion of the stem, another approach may be used. This development accounts for the diffusion of heat through the bark of the stem as well as diffusion in the water.

Assume that the radius of a plant stem is sufficiently large so that the xylem tissue, although in the form of a cylindrical shell, can be represented as a plane. Assign the coordinates x and z to the plane, and the diffusivity k to the water constituting the substance of the plane. Add the third dimension y by placing wood of diffusivity k_2 to both sides of the very thin xylem represented by the x, z plane. Within the xylem, at x = 0, let an instantaneous line source of heat be generated. If the water in the xylem is flowing with uniform velocity U in the x direction, then the temperature distribution can be represented by

$$v = \frac{Q}{4\pi t (k_1 k_2)^{1/2}} \exp\left\{-\frac{1}{4t}\left[\frac{(x - Ut)^2}{k_1} + \frac{y^2}{k_2}\right]\right\}, \qquad [8]$$

where k_1 is the thermal diffusivity of water, k_2 the thermal diffusivity of wood, and y is the thickness of the bark.

One assumption made in using equation [8] to describe the flow of heat generated within the sap stream is that the line source moves through the water without the water itself moving. A more realistic, but mathematically intractable, model would be a very thin cylindrical surface moving with a velocity U, and at t = 0, the circumference at x = 0 is instantaneously heated. The magnitude of the error caused by this assumption, and hence, the validity of equation [8] will be approached experimentally. Assuming equation [8] is valid, differentiating with respect to time and equating the result to zero yields

the velocity

$$U = \frac{1}{t_m}\left[x^2 + y^2(k_1/k_2) - 4k_1t_m\right]^{1/2} \qquad [9]$$

Equation [9] contains two factors which account for diffusion of heat (a) outward through the bark and inward towards the center $[y^2(k_1/k_2)]$, and (b) within the moving water $(-4k_1t_m)$. In cases where x is large and t_m is small, these factors become less significant.

A recent paper by Ladefoged (1960) presented data which allows a partial check to be made on the above theory. Ladefoged used an apparatus similar to the one proposed for this study to measure the quantity of water consumed by trees. Figure 1 shows a curve calculated by using equation [3]. The circled points were taken from Ladefoged's Figure 6. The constant A in equation [3] was arbitrarily chosen to facilitate comparison of the experimental and theoretical data. This constant shifts the ordinate and changes the slope, but does not alter the inverse relationship. In this comparison, the difference between the curve calculated using equation [3] and the simple expression $U = x/t_m$ would be small because x is much larger than the term $-2kt_m$. Ladefoged stated that his data indicated an inverse relationship between velocity and time of maximum temperature rise, but he did not elaborate. Equation [2] predicts this inverse. Equation [9] was not used in the calculations because data for the term $y^2(k_1/k_2)$ were not available from his paper. It can be implied from Figure 1 that a theoretical interpretation of the sap flow phenomena may be successful.

REFERENCES

1. Bloodworth, M. E., Page, J. B., and Cowley, W. R. A thermoelectric method for determining the rate of water movement in plants. Soil Sci. Soc. Amer. Proc. 19: 411-414. 1955.

2. Bloodworth, M. E. Page, J. B., and Cowley, W. R. Some applications of the thermoelectric method for measuring water flow rates in plants. Agron. J. 48: 222-228. 1956.

3. Decker, J. P., and Wetzel, B. F. A method for measuring transpiration of intact plants under controlled light, humidity, and temperature. Forest Science, Vol. 3, No. 4. 1957.

4. Ladefoged, K. A method for measuring the water consumption of larger intact trees. Physiologia Plantarum 13: 648-658. 1960.

5. Marshall, D. C. Measurement of sap flow in conifers by heat transport. Plant Physiol. 33: 385-396. 1958.

PERSONNEL: R. D. Jackson, W. L. Ehrler, F. S. Nakayama.

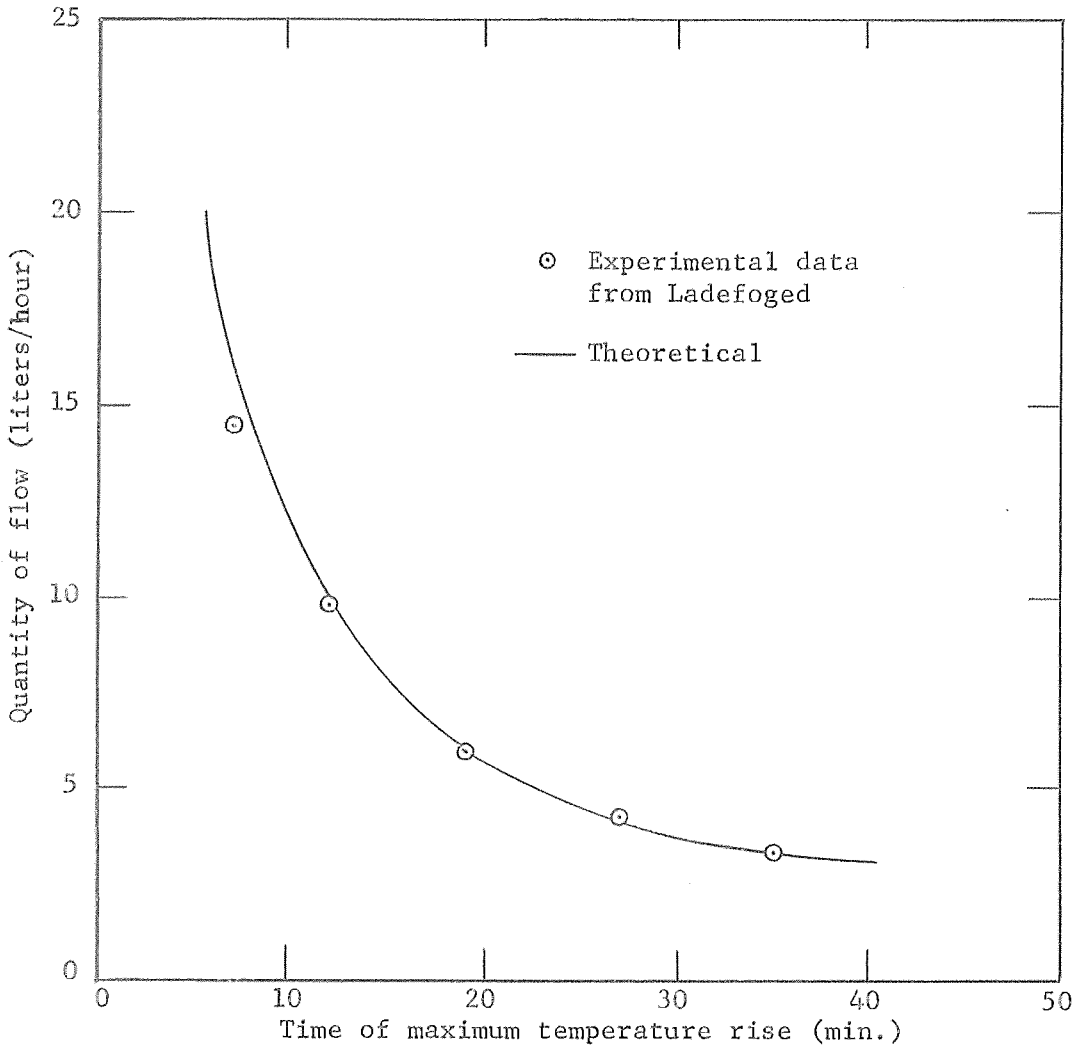

Figure 1. A comparison of Ladefoged's experimental data of the quantity of sap flow in a sycamore and a theoretical curve.

TITLE: DESCRIPTION AND EVALUATION OF THE CONTROLLED-ENVIRONMENT ROOM

LINE PROJECT: SWC c13-1

The Laboratory has a spacious plant-growth room equipped to maintain several environmental factors under precise control. This will facilitate measurements of the transpirational losses of soil water under a specified combination of environmental variables. Room number 145, 20 feet long by 9 feet wide, has a two-tiered, solid bank of fluorescent lights 10 feet above the floor, with 2 feet of space above the lights. One foot below the lights a transparent panel made of 5 mil "weatherable Mylar" divides the room into upper and lower chambers. The upper plenum, cooled by two 5-ton refrigeration units, removes the heat output of the 116 8-foot "Powergroove" fluorescent lamps and their ballast units. This arrangement facilitates termperature control of the lower chamber and maintains the air temperature surrounding the lamps at the optimum value, but at the expense of about 15% of the light intensity, due to absorption by the "Mylar".

To provide for a possible experimental requirement of graded light intensities, a dimming circuit permits certain banks of light to be turned off, the omitted lights being uniformly spaced over the whole area. Light intensity measurements were made in the growth room at 25 points in a grid pattern, by use of both a Weston light meter and an Eppley pyrheliometer. At 5 feet above the floor the intensity, with one-half the lights on, alternately, was 1200 $\pm$ 100 foot-candles, or 0.115 $\pm$ 0.025 gram cal. $cm^{-2} min.^{-1}$, dropping significantly below this only at the corners of the room. At 3 feet above the floor, the

intensity decreased about 200 foot-candles. With all the lights on, the intensity was doubled, reaching about 2200 foot-candles at the 5-foot level, and greater values nearer the lights.

Eight 300-watt Mazda bulbs in the ceiling of the room supplement light in the far red end of the spectrum, in which fluorescent lamps are deficient. The quality of the combined light sources will be evaluated by means of a special set of spectral transmittance filters covering the visible range. Duration of photoperiod can be controlled by a clock.

In the upper plenum poor distribution of the air stream from the refrigeration units necessitated installation of a Masonite baffle the full tength of the chamber, and placement of diffusers at the mouth of the air ducts. The object of these modifications was to maintain a uniform 70° F., at which air temperature the efficiency of fluorescent light output is greatest.

Another difficulty that appeared was the great heat accumulation in the room adjacent to Room 145, where most of the equipment necessary for environmental control is located. The reactor unit, which converts 60 cycles to the 360 cycles needed by the fluorescent lights, was cooled inadequately by a fan. Overheating caused stoppage of operations after four hours. A refrigeration unit has been installed to prevent overheating. At the same time, insulation was applied to the walls to minimize the strident noise that comes from the reactor during its operation.

A recorder-controller apparatus enables one to designate a given air temperature to be maintained in the lower chamber of the plant-growth room, with ± 1° F. tolerance. Setting of wet and dry bulb

values, to develop a specified relative humidity, also is accomplished at the recorder-controller panel.

Both refrigeration and steam-heating coils are used to control the temperature of the air that is ducted into the room. Live steam builds up high humidity, whereas low humidity is brought about by removal of vapor through condensation, and, at very low levels, by means of a chemical dryer. Air enters through vents extending the full length of the room at the bottom, and returns through vents along the top of the same side. The equipment is designed to maintain a room temperature of 5° C. to 40° C., at a specified relative humidity; or it is capable of operating at any selected temperature between 20° C. and 40° C. at a relative humidity ranging from 5% to 95%. A chemical dryer, employing a dessicant, is used over the low humidity range by manual control of a switch. In general, the controls are pneumatic. Room temperature is sensed by a liquid-in-metal type bulb. The pressure sensed by the bulb is compared to the control setting. Deviations from the control setting result in air pressures that, in turn, control the opening of a steam valve by proportionate amounts, while a refrigeration coil is running continuously. A greater or lesser rate of heat output by the steam coil controls the temperature at the desired point. Humidity control above the dewpoint of the refrigerant coil is achieved by injecting steam in quantities just sufficient to balance condensation at the constantly operative refrigerant coil. Below the coil dewpoint, humidity is controlled by on/off operation of the chemical dryer.

Tests of the room have shown it to be capable of maintaining a stable temperature at numerous combinations of wet and dry bulb settings,

but not enough points have been covered to draw a final conclusion. There has been some difficulty in reaching the extremely low range of relative humidity. Therefore, the refrigeration units were sealed tightly with a waterproofing compound, and water traps were installed in the condensate lines in an effort to eliminate entrance of water vapor to the plant-growth room from the upper plenum.

Although several air changes per minute occur in the room, the whole system of room and air ducts is closed to the external atmosphere. This brings up the matter of adequacy of carbon dioxide for plant growth. At present a Mine Safety Appliances Corporation infrared analyzer is being modified to detect carbon dioxide rather than water vapor, so that the air in the growth room can be monitored. If necessary, carbon dioxide will be added to the air stream.

A current research project, designed to study water uptake at low soil temperatures, requires facilities for controlled root temperatures. Accordingly, equipment has been designed that will make possible even more comprehensive control of the environment. In the growth room two insulated tanks are being installed which will hold water baths capable of being maintained at a given root temperature from 5° to 25° C., with $\pm 1^{\circ}$ C. accuracy.

PERSONNEL: W. Ehrler and C. H. M. van Bavel

TITLE: UTILIZATION OF LIMITED WATER SUPPLIES FOR THE GREATEST ECONOMIC RETURN IN THE IRRIGATION OF COTTON

LINE PROJECT: SWC c13-2 CODE NO.: Arizona (ph-2)

LOCATION: University of Arizona Cotton Center, 44th and Broadway, Phoenix, Arizona

PERSONNEL INVOLVED: Leonard J. Erie, Karl Harris, and Fred French

DATE OF INITIATION: 1947. REVISED: 1957, 1958, 1959, and 1960

COOPERATION: (See previous annual report)

OBJECTIVES: (See previous annual report)

NEED FOR STUDY: (See previous annual report)

DESIGN OF EXPERIMENT:

Long and short staple cotton was planted in four-row plots, five replications, and was given four irrigation treatments. One hundred pounds of actual nitrogen was applied before planting time, April 2, 1960. Six side-dressing treatments were initiated on irrigation treatment no. 3, along with three top-dressing treatments and a count-blossom-only and check plot.

Irrigation Treatments

No. 1 - Irrigate when 85% of available water has been used from top three feet of root zone.

No. 2 - Irrigate when 75% used.

No. 3 - Irrigate when 65% used.

No. 4 - Irrigate when 55% or less is used.

Fertilizer Treatments on Irrigation Treatment No. 3

Side-dress with 85 lbs. per acre:

1. June 23
2. July 11
3. August 3
4. August 24
5. June 23 and July 11
6. June 23 and August 3

Urea and Choline applied to Plant Leaves

D. Urea - 1/2 lb. per acre July 22

E. Choline - 1 lb. per acre

F. Choline - 1 lb. per acre

Tagging Treatments

A. Tag all blossoms each day all fruiting season.

B. Count blossoms each day all fruiting season.

C. Count bolls only at harvest date.

The season seemed normal, the cotton got an early start, and a good stand was obtained. Long staple did not grow rank, but attained an unusually short stature. Volume weight measurements showed considerable compaction in this newly leveled field. More water infiltrated into the soil where consumptive-use and tagged plots were located than in the area where large sample yields were made. This was due to uneven leveling. Residual production differences were evident within this field.

Soil moisture measurements were made on all short staple irrigation treatments and on two treatments in the long staple.

Approximately 70,000 blossoms were tagged and their bolls processed. Two rows, each 300 feet long, were picked twice for yield purposes on all long and short staple irrigation plots. Fiber-quality measurements for the 1959 Cotton Study were completed by the University of Arizona.

EXPERIMENTAL DATA AND OBSERVATIONS:

Cotton-quality measurements for the 1959 cotton samples were made by the University of Arizona this summer. They are not included because of their voluminous nature, but are discussed in item 1 under comments. The measurements were made on fiber strength, length, fineness, lint percent, lint index, seed index, seeds per boll, and bolls per pound.

Yield Acala 44 - 1960 Lbs. Lint per Plot* (Bulk)

Trt.	Replications 1	2	3	4	5	Mean	Lint Yield Lb/Acre
1	57.17	46.62	52.08	44.01	42.39	48.45	1055.2
2	61.99	60.40	63.45	50.09	46.50	56.49	1230.4
3	64.18	57.30	57.60	48.15	48.57	55.16	1201.4
4	63.83	63.48	68.16	53.74	54.48	60.74	1323.0

*Each plot represents 600 lineal feet of row.
Sig. 1%
LSD 1% = 4.84
5% = 3.45

Yield Pima S-1 - 1960 Lbs. Lint per Plot* (Bulk)

Trt.	Replications 1	2	3	4	5	Mean	Lint Yield Lb/Acre
1	31.93	32.90	33.21	28.89	32.94	31.97	696.3
2	30.71	31.00	35.36	32.61	33.24	32.58	709.6
3	29.40	35.92	30.97	31.62	28.50	31.28	681.3
4	31.28	34.40	38.80	38.49	34.48	35.49	774.0

*Each plot represents 600 lineal feet of row.
Sig. 1%
LSD 1% = 4.19
5% = 2.99

Yield Acala 44 - 1960 Gms Seed Cotton per 16 Plants

Trt.	Replications 1	2	3	4	5	Mean
1	1704.4	1758.7	1194.3	1593.0	1590.9	1568.26
2	1498.0	1888.2	1436.3	1413.2	1840.6	1615.26
3	1663.1	1495.6	1430.0	2040.6	1831.5	1692.16
4	1597.8	1375.2	1746.0	1768.9	1858.7	1669.32

No significance

Yield Pima S-1 - 1960 Gms Seed Cotton per 16 Plants

Trt.	Replications 1	2	3	4	5	Mean
1	1055.9	946.2	769.5	993.0	1071.9	967.30
2	1154.5	1152.3	1076.2	1102.6	1129.5	1123.20
3	1118.7	985.2	1104.9	1314.0	1089.3	1122.42
4	1178.6	1135.5	885.2	1125.4	1189.8	1102.90

Significance 5%
LSD = 122.5

Consumptive-use and soil-moisture percentage curves were prepared for all short staple irrigation treatments and on treatments one and three in the long staple. Treatment three most nearly represents optimum production. Figures 1 and 2 show the conditions under which treatment three produced.

Total blossoms and bolls are shown in the following tables. The tables show the treatments that can be compared.

Blossom and Boll Summation for Irrigation Treatments up to Sept. 17* (SS)

Treatment	Total Blossoms	Total Bolls	Av.Wt./Boll	Efficiency
1	3436	1260	5.91	36.7
2	4023	1291	6.06	32.1
3	3979	1265	6.24	31.8
4	3417	1275	6.31	37.3

*Treatment 3 had a heavy after-September 17 set.

Blossom and Boll Summation
For Irrigation Treatment Three on Tagging Techniques (SS)

Treatment	Total Blossoms	Total Bolls	Av.Wt./Boll	Efficiency
3A	3979	1265	6.24	31.8
3B	3925	1451	6.12	37.0
3C		1390	6.22	

Blossom and Boll Summation

Fertilizers on Irrigation Treatment Three (SS)

Treatment	Total Blossoms	Total Bolls	Av.Wt./Boll	Efficiency
3A	3979	1265	6.24	31.8
31	4200	1265	6.33	30.1
32	4446	1282	6.35	28.8
33	4559	1346	6.30	29.5
34	4047	1226	6.33	30.3
35	4358	1333	6.26	30.6
36	4540	1320	6.35	29.1
3D	4190	1287	6.37	30.7
3E	4122	1240	6.44	30.1
3F	4253	1339	6.23	31.5

Blossom and Boll Summation for Irrigation Treatments up to Sept. 17 (LS)

Treatment	Total Blossoms	Total Bolls	Av.Wt./Boll	Efficiency
1	3159	2078	2.28	65.8
2	3298	2153	2.54	65.3
3	3391	2036	2.66	60.0
4	3423	2006	2.68	58.6

Blossom and Boll Summation

For Irrigation Treatment Three on Tagging Techniques (LS)

Treatment	Total Blossoms	Total Bolls	Av.Wt./Boll	Efficiency
3A	3391	2036	2.66	60.0
3B	3242	1908	2.80	58.9
3C		1946	2.73	

Figures 3 and 4 represent the blossom and boll phenomena for the 65%-used irrigation schedule treatment 3 and 4. Figure 5 represents the accumulative blossom and boll data for irrigation treatments on short staple cotton.

COMMENTS AND INTERPRETATIONS:

Lint-quality data for the 1959 crop.

1. Fiber strength on short staple seems to decrease when plants are in a high boll-producing period. Strength decreased toward the end of the growing season in 1958 but did not follow this trend in 1959. Long staple strength was highest in the wetter treatments with the strongest fibers being produced in September.
2. Fiber length is short on early and late bolls of short staple cotton. Considerable variability exists throughout the season, but seemingly not connected with irrigations. On long staple, the wetter treatments indicated better fiber length. Inferior length exists in bolls produced in June and the latter two weeks of the growing season.
3. Fiber fineness on short staple averaged about 4.5 during the major producing periods. Long staple fibers became coarser as the year progressed until the middle of August, then decreased to very fine by the middle of September. The dryest treatments showed a trend of being coarser.
4. Lint percent on short staple seems to be very desirable during high fruiting periods. It appears to be best on high moisture treatments, especially late in the growing season. Long staple was inverse to short in that low linting periods were associated

with peak fruiting periods. Lint percent decreased until the first of August, then increased to a maximum by the end of the growing season.

5. Lint indexes were similar to 1958 data. On long staple, the dryer treatment had the highest index.

6. Seed index was similar to 1958 data.

7. Seeds per boll were lowest on short staple on the dryer treatments. The seeds per boll increased as the season progressed. The long staple data indicated less seeds on the dryer irrigation treatments, with increasing numbers of seeds until September 1.

8. Bolls per pound. Bolls increased in size as the year progressed until September 1. The dryer treatment had smaller bolls. On long staple, the wet treatments had larger bolls and bolls increased during the growing season until a peak was reached about August 20.

9. Yield results showed significance between the dryest treatment (1) and the others. Treatments that we thought were optimum, performed as expected. The optimum producers were irrigated when about 65% of the available water in the top three feet was used.

10. Blossom and boll data again point out that if a cotton plant is given optimum care during part of the year, it can make up for poor-care periods. It would seem the plant has the ability to produce only a certain amount of fruit for a particular year. Irrigations may alter these blossoming and fruiting periods. Plants treated in such a way as to produce less blossoms seemed to make up for this by better efficiency in set. The wetter treatments have larger bolls in both long and short staple irrigation

treatments. More pronounced fruiting periods occur on stressed moisture treatments.

11. The tagging technique phase of the study showed that handling the blossoms had no effect on fruiting efficiency. This was inverse to 1959 data.

12. The fertilizer phase of the study on irrigation treatment three indicated that the present fertilizer practice (100 lbs. nitrogen per acre) is adequate. Possibly, blossoms were increased by side-dressing in early August; however, the boll-make efficiency decreased when blossoms were increased and bolls were smaller.

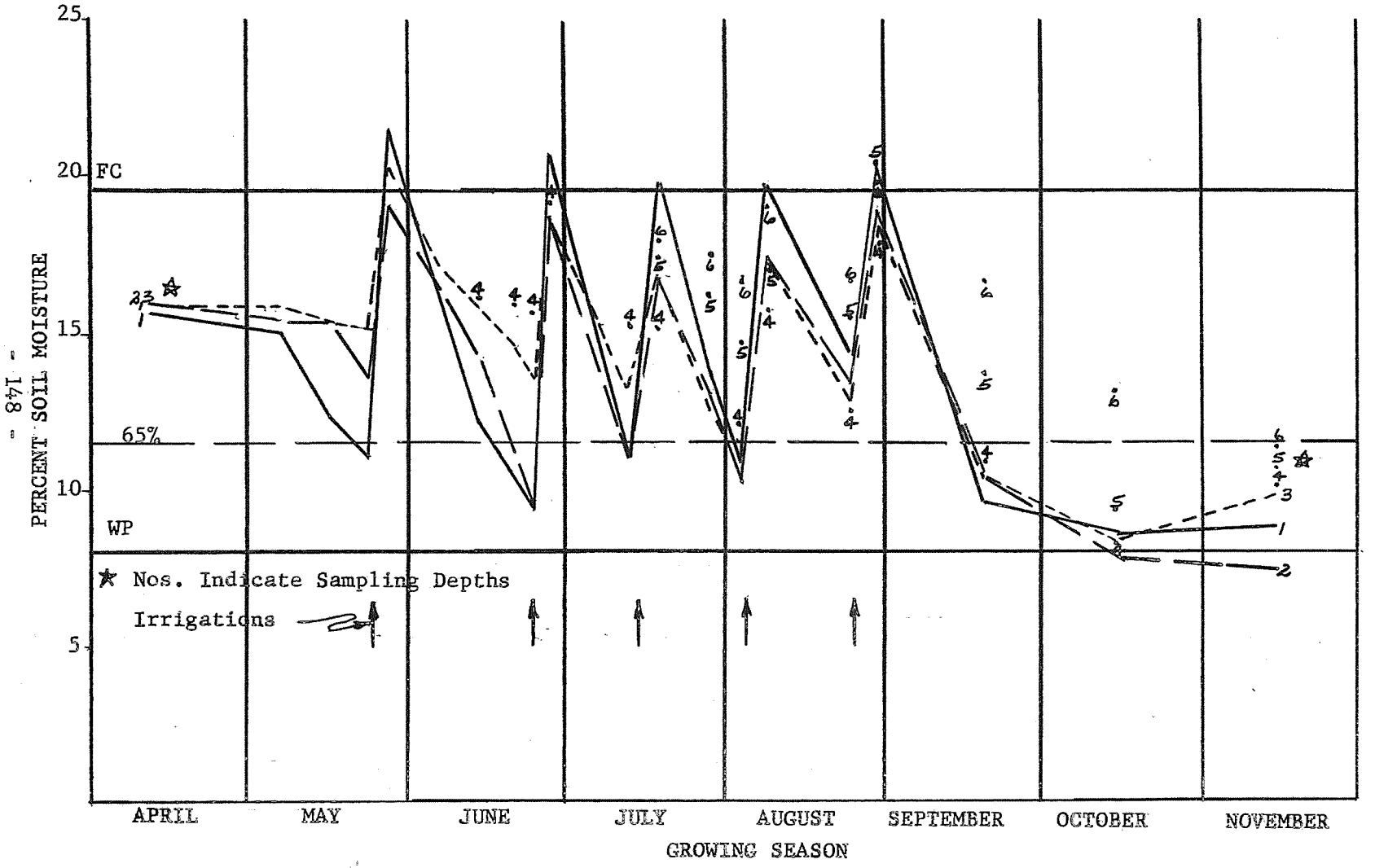

Figure 1. Soil Moisture Percentage Short Staple Cotton 1960. Trt. 3.

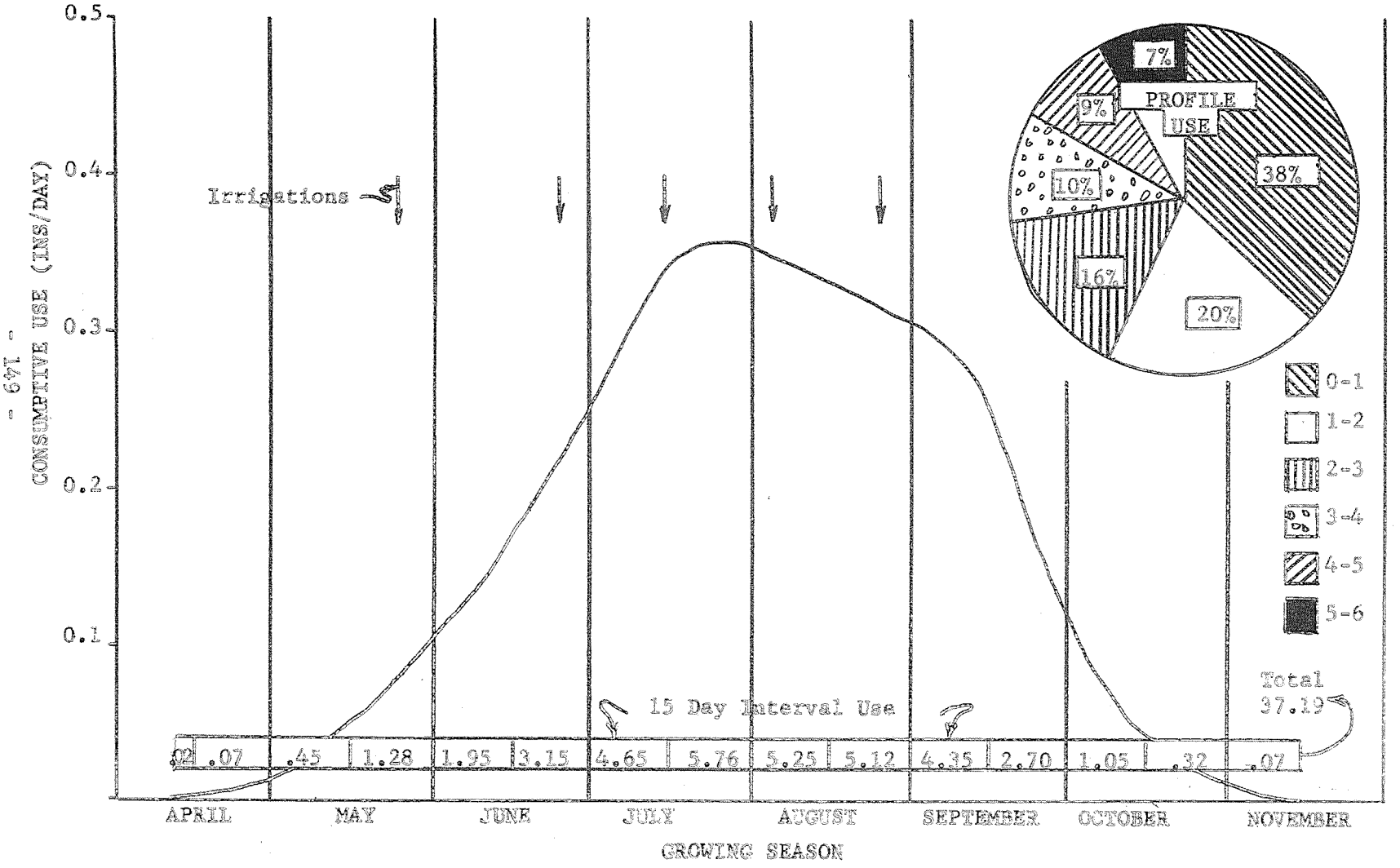

Figure 2. Consumptive Use - Cotton Short Staple 1960. Trt. 3.

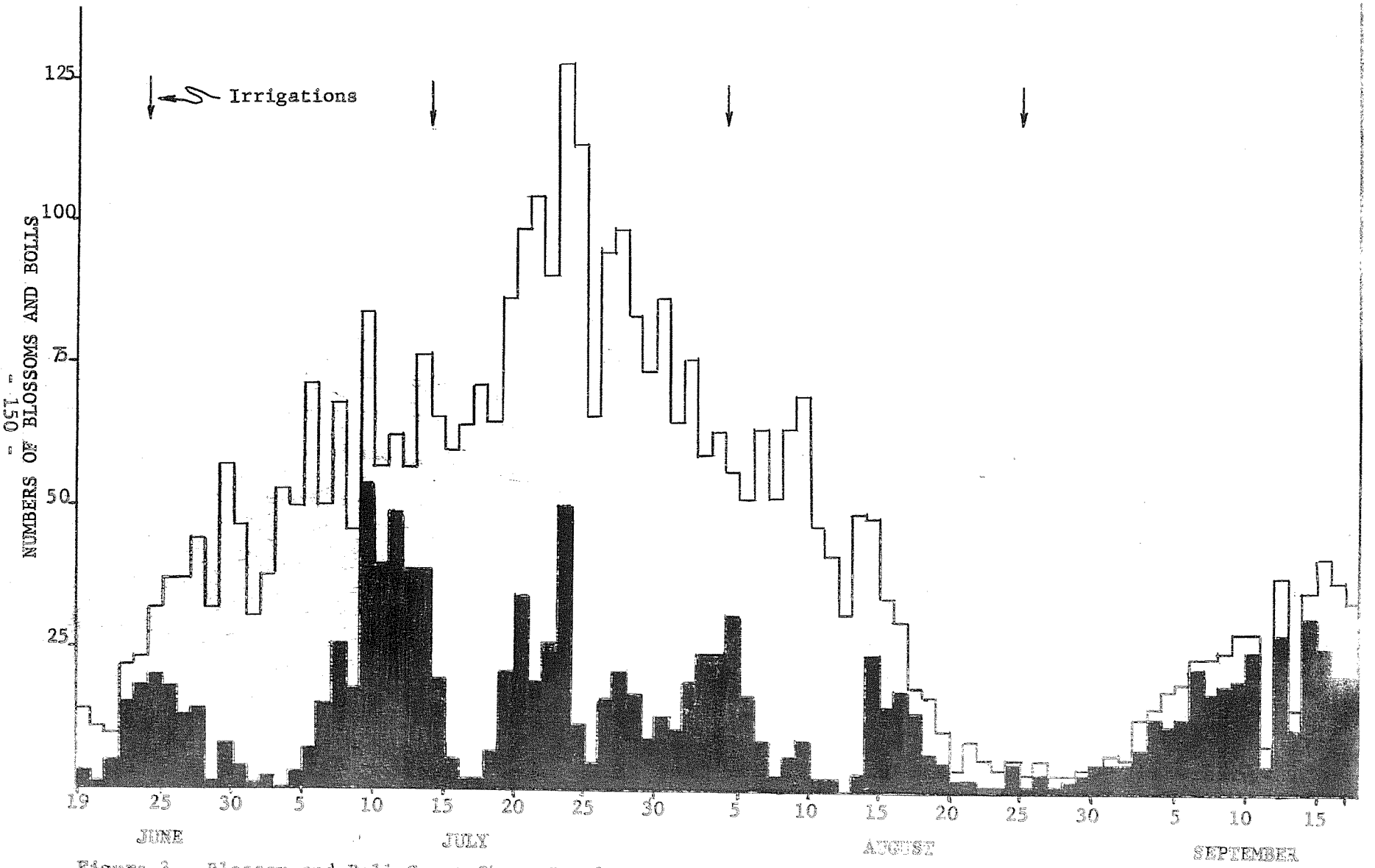

Figure 3. Blossom and Boll Count Short Staple. Trt. 3. - 1960

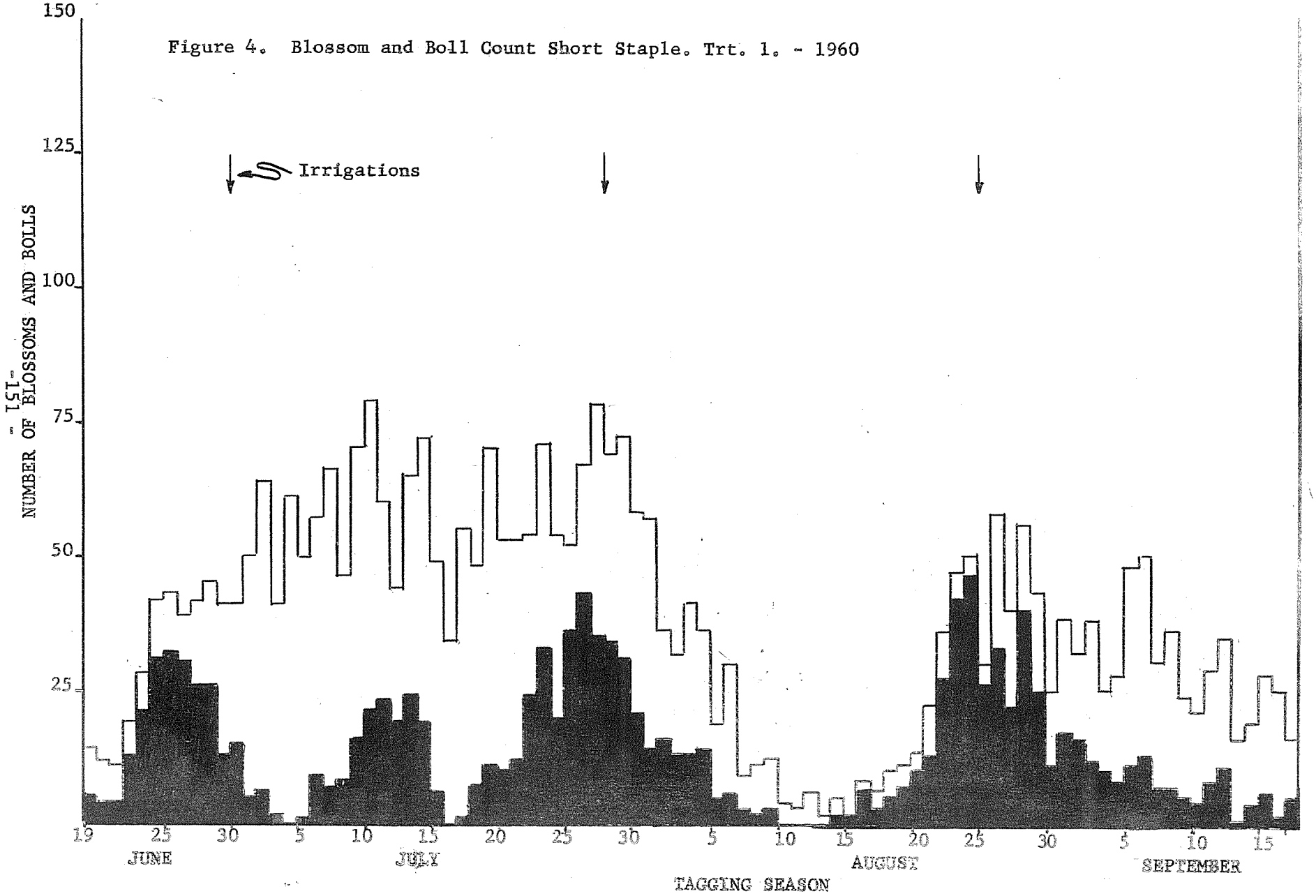
Figure 4. Blossom and Boll Count Short Staple. Trt. 1. - 1960
Irrigations
NUMBER OF BLOSSOMS AND BOLLS
150
125
100
75
50
25
19
25
30
5
10
15
20
25
30
5
10
15
20
25
30
5
10
15
JUNE
JULY
AUGUST
SEPTEMBER
TAGGING SEASON

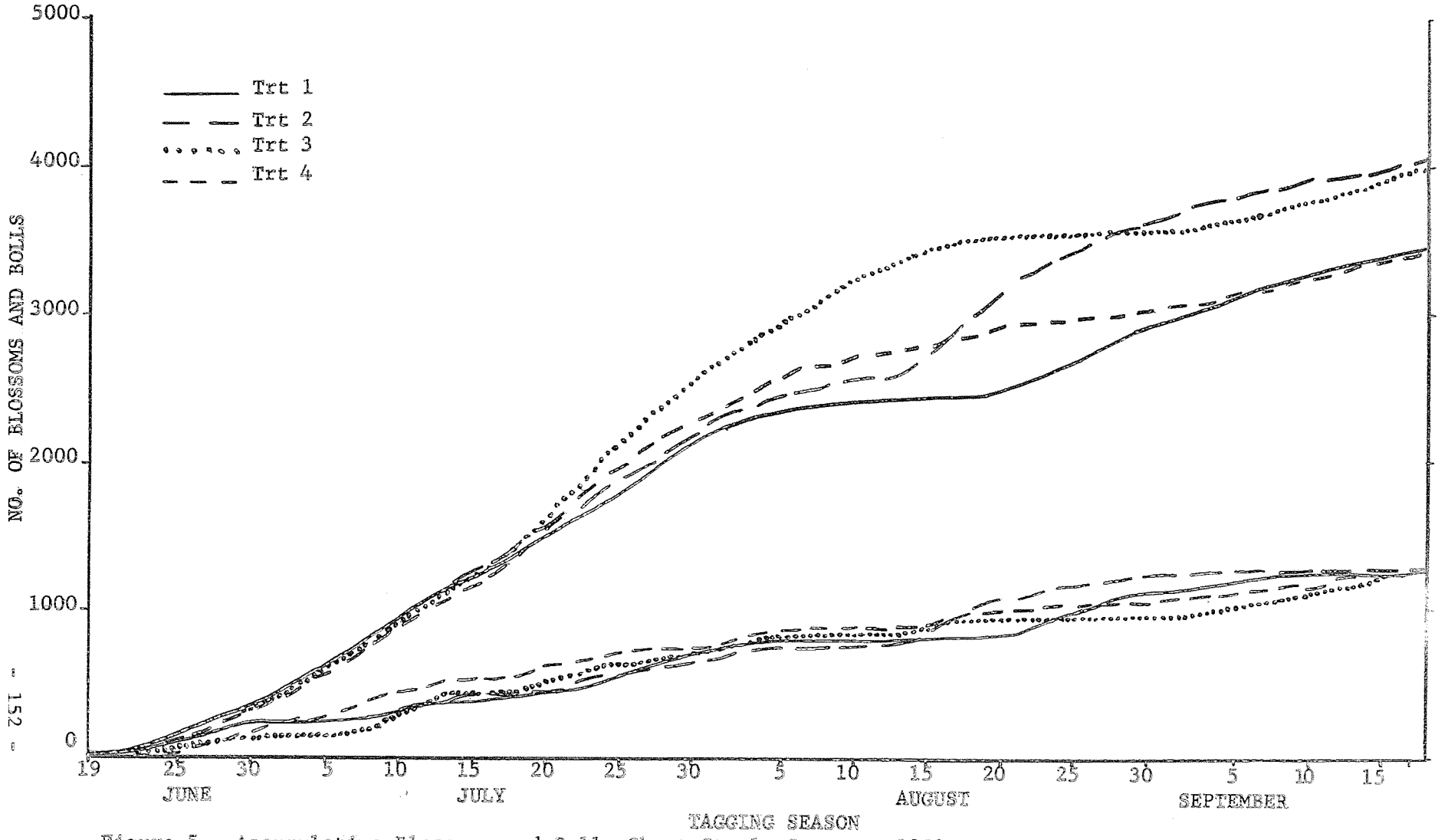

Figure 5. Accumulative Blossoms and Bolls Short Staple Cotton - 1960. Irrigation Treatments

TITLE: IRRIGATION SCHEDULES FOR SORGHUM PRODUCTION

LINE PROJECT: SWC c13-2 CODE NO.: Arizona ph-5

LOCATION: University of Arizona, Mesa Experiment Farm

PERSONNEL INVOLVED: Leonard J. Erie and Fred French

DATE OF INITIATION: 1956

OBJECTIVES: See Annual Report 1958.

NEED FOR STUDY: The width between rows of sorghum planted in borders has been reduced by farmer practice from 40 inches to 20 inches. Irrigation schedules from previous years were utilized to see if they would be adequate under the new planting scheme.

DESIGN OF EXPERIMENT:

Four of the original irrigation treatments used in 1958 were utilized this year, these being treatment C, D, E, and G. Treatment M was initiated on which the sorghum was irrigated when 60% of the available water had been depleted from the second foot. Each of the five treatments was replicated five times.

Two varieties, RS-610 and DD-38, were planted on each of the 25 borders used for measurements, with 2 borders used as buffers. One hundred pounds of ammonium solphate were applied before plowing under of wheat stubble. A heavy pre-planting irrigation was given about 10 days before planting.

IRRIGATION SCHEDULES

Trt.	*Aug. 3	Aug. 17	Sept. 2	Sept. 8	Sept. 12	Oct. 12
C	x	x		x	x	x
D	x	x		x	x	
E	x	x		x		
G	x	x				
M	x	x	x			

*August 3 irrigation was given essentially to control infestation of corn borer.

EXPERIMENTAL DATA:

MEAN YIELDS	POUNDS PER ACRE	
Treatment	DD-38	RS-610
C	4190	4700
D	4160	4570
E	4360	4750
G	3950	4385
M	3660	4280

COMMENTS AND INTERPRETATIONS:

1. The analysis of variance showed no significance in yield or weight per head, but it did show significance in weight per 500 seeds. Treatment "E" (three irrigations) was the highest yielder, as in previous years. Increasing irrigations over three (treatment C and D), did not increase yield. Decreasing irrigations by one (treatment G), decreased yield by about 400 pounds per acre.
2. Consumptive use for 1960 was similar to previous years (1956, 1957, 1958) when sorghum was planted in 40-inch rows. Yields on 20-inch

rows (1960) were similar to those for previous years. This lack of yield increase was not expected in view of results obtained in past studies by other researchers.

3. The soil moisture percentage graph shows the second and third irrigations were given when the soil was still quite wet. This condition indicates need for better guides—other than the calendar—to irrigate by in order that the most beneficial results may be obtained per unit of water (see Figure 1).

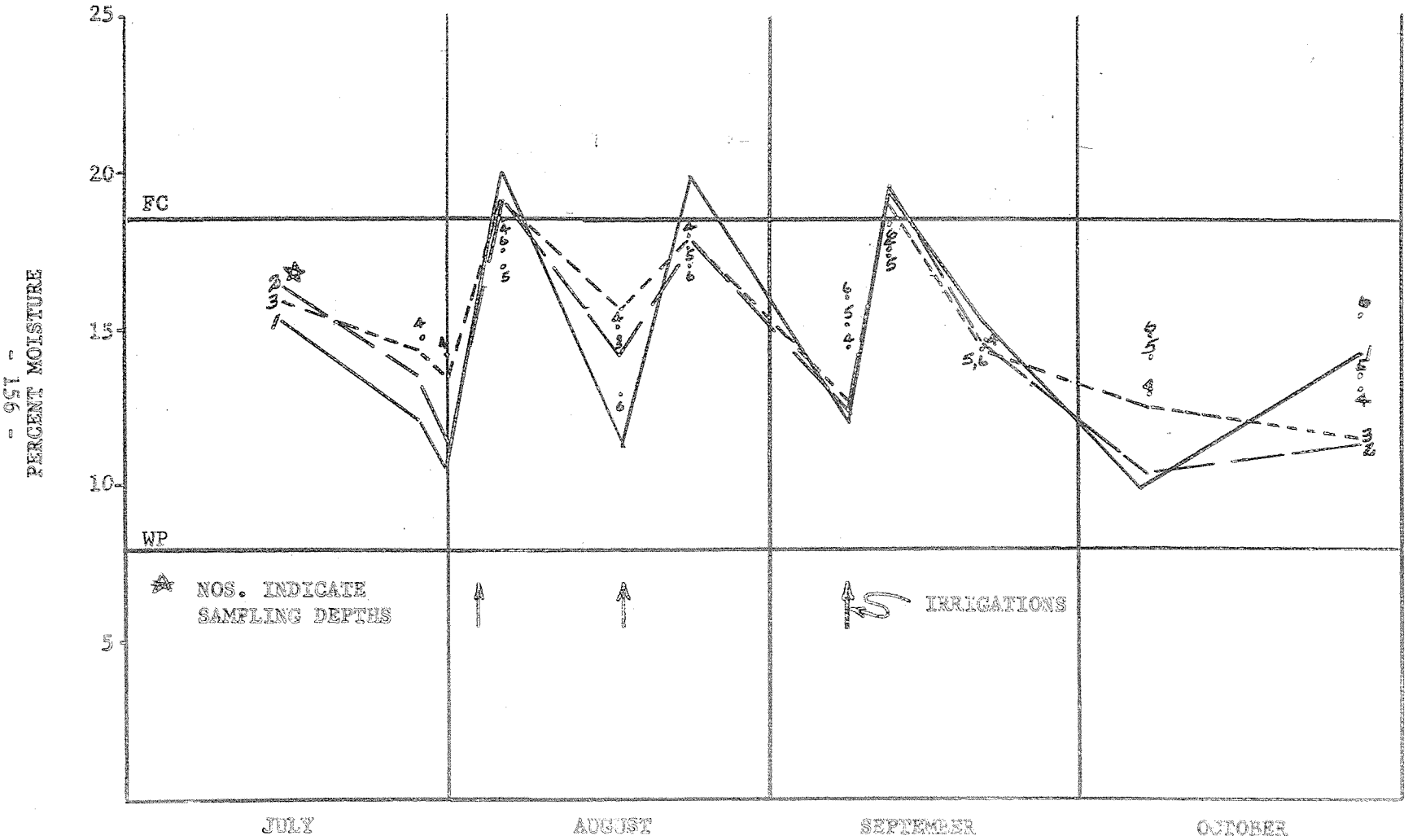
25
20
15
10
5
FC
WP
PERCENT MOISTURE
NOS. INDICATE SAMPLING DEPTHS
IRRIGATIONS
JULY
AUGUST
SEPTEMBER
OCTOBER
GROWING SEASON

Figure 1.

TITLE: CONSUMPTIVE USE OF WATER BY CROPS IN ARIZONA

LINE PROJECT: SWC C13-3 CODE NO.: Arizona ph-8

LOCATION: Various locations throughout the State of Arizona

PERSONNEL INVOLVED: Leonard J. Erie, Karl Harris, and Fred French

DATE OF INITIATION: 1959

OBJECTIVES: See Annual Report 1959.

NEED FOR STUDY: See Annual Report 1959.

DESIGN OF EXPERIMENT: See Annual Report 1959.

1. Procedure:

Consumptive-use measurements were made at the following locations in 1960.

a) Wheat - Mesa Experiment Farm
b) Cotton - Cotton Research Center
c) Guar - Mesa Experiment Farm
d) Safflower - Mesa Experiment Farm
e) Sorghum - Mesa Experiment Farm
f) Blue Panicum - Mesa Experiment Farm
g) Bermuda Grass - Mesa Experiment Farm
h) Cole Crops (Cabbage, Broccoli, Cauliflower) - Mesa Experiment Farm
i) Cantaloupes - Mesa Experiment Farm
j) Other vegetables (Onions, Carrots) - Mesa Experiment Farm

EXPERIMENTAL DATA AND OBSERVATIONS:

On cole crops—cabbage, broccoli, cauliflower, and carrots—frequent early irrigations were given to obtain stands. Unusually heavy rains occurred the last of October. Because of this, it can be expected that calculations for seasonal consumptive use and the first foot of profile use would be high. The calculations for seasonal use can be expected to be about four inches too high.

15-Day-Interval Use and "K" Values for Various Crops in Arizona - 1960

	Cotton		Wheat		Guar		Safflower		Sorghum	
Dates	CU	K	CU	K	CU	K	CU	K	CU	K
Jan. 16-31			.03	.05						
Feb. 1-14			.28	.17			.13	.08		
15-29			.45	.27			.30	.18		
March 1-15			1.20	.48			.75	.30		
16-31			2.56	.92			1.60	.58		
April 1-15	.02	.03	4.20	1.37			3.00	.98		
16-30	.07	.02	4.65	1.60			4.50	1.55		
May 1-15	.45	.13	3.90	1.10			5.85	1.66		
16-31	1.28	.34	.88	.35			7.36	1.94		
June 1-15	1.95	.48					7.20	1.75		
16-30	3.15	.74			.39	.11	5.40	1.24		
July 1-15	4.65	1.10			1.65	.39				
16-30	5.76	1.26			4.16	.91			2.89	.59
Aug. 1-15	5.25	1.28			4.35	1.07			5.85	1.43
16-31	5.12	1.25			3.84	.94			6.56	1.60
Sept. 1-15	4.35	1.19			3.15	.86			4.35	1.19
16-30	2.70	.81			3.15	.93			1.95	.58
Oct. 1-15	1.05	.38			2.55	.88			.60	.22
16-31	.32	.12			1.35	.49			.12	.06
Nov. 1-15	.07	.03			.30	.14				
16-30										
Dec. 1-15										
16-31										

15-Day-Interval Use and "K" Values for Various Crops in Arizona - 1960

Dates	Blue Panicum		Bermuda		Cabbage		Broccoli		Cauliflower	
	CU	K	CU	K	CU	K	CU	K	CU	K
Jan.										
1-15					2.10	1.35	2.40	1.55	2.25	1.45
16-31					2.08	1.12	2.40	1.30	1.76	.95
Feb.										
1-14					1.68	.97	1.82	1.05	.90	.49
15-29					1.65	.95	.84	.62		
March										
1-15					.66	.36				
16-31	.54	.51								
April										
1-15	3.00	.98	.72	.88						
16-30	3.60	1.24	3.75	1.29						
May										
1-15	3.90	1.10	4.20	1.19						
16-31	4.32	1.14	4.64	1.22						
June										
1-15	4.20	1.03	4.35	1.06						
16-30	4.65	1.07	4.20	.97						
July										
1-15	4.95	1.16	4.05	.95						
16-31	5.12	1.12	4.00	.87						
Aug.										
1-15	3.45	.85	3.45	.85						
16-31	4.32	1.05	3.36	.82						
Sept.										
1-15	4.20	1.15	2.70	.74						
16-30	3.90	1.15	2.25	.66						
Oct.										
1-15	3.30	1.18	1.80	.65	1.20	.45	1.35	.50	1.80	.67
16-31	2.40	.87	.48	.44	3.20	1.07	3.36	1.13	2.78	.93
Nov.										
1-15	1.20	.54			3.45	1.57	3.60	1.63	2.85	1.30
16-30	.20				3.00	1.46	3.45	1.68	2.85	1.39
Dec.										
1-15					2.70	1.47	3.15	1.71	2.85	1.55
16-31					2.40	1.34	2.88	1.61	2.72	1.52

15-Day-Interval Use and "K" Values for Various Crops in Arizona - 1960

Dates	Cantaloupe CU	Cantaloupe K	Carrots CU	Carrots K	Onions CU	Onions K
Jan.						
1-15			1.65	1.06	.20	.53
16-31			1.28	.69		
Feb.						
1-14			.60	.32		
15-29						
March						
1-15						
16-31						
April						
1-15	.22	.09				
16-30	1.20	.41				
May						
1-15	2.40	.68				
16-31	3.84	1.01				
June						
1-15	4.65	1.13				
16-30	5.40	1.24				
July						
1-15	3.75	.88				
16-31	.51	.59				
August						
1-15						
16-31						
Sept.						
1-15						
16-30			.21	.14	.04	.10
Oct.						
1-15			2.10	.78	2.85	1.06
16-31			5.76	1.93	5.92	1.99
Nov.						
1-15			4.80	2.18	4.80	2.18
16-30			2.70	1.32	3.75	1.83
Dec.						
1-15			2.40	1.30	3.15	1.71
16-31			2.40	1.34	2.40	1.31

Profile Use by Various Crops in Arizona in Inches of Water

Depth	Cotton	Wheat	Guar	Safflower	Sorghum
0-1	14.20	6.72	9.78	13.58	10.64
1-2	7.48	4.83	4.60	9.64	4.04
2-3	5.85	3.46	4.07	7.40	3.22
3-4	3.81	1.36	2.74	2.87	2.09
4-5	3.21	1.28	1.75	1.57	1.13
5-6	2.66	.57	1.61	.96	1.24
Total	37.21	18.22	24.55	36.02	22.36

	Blue Panicum	Bermuda	Cabbage	Broccoli	Cauliflower
0-1	19.59	18.37	14.41	14.09	11.84
1-2	12.13	10.37	5.72	5.60	4.67
2-3	10.07	9.56	1.89	3.01	2.39
3-4	7.29	5.64	1.95	2.49	1.84
4-5	4.56				
5-6	3.56				
Total	57.20	43.94	23.97	25.19	20.74

	Cantaloupe	Carrots	Onions
0-1	6.28	11.68	12.87
1-2	6.46	5.91	5.63
2-3	5.10	2.34	2.53
3-4	3.88	1.94	2.22
4-5			
5-6			
Total	21.72	21.87	23.25

TITLE: TILLAGE PRACTICES AS RELATED TO PRODUCTION AND INFILTRATION OF WATER

LINE PROJECT: SWC c13-5 CODE NO.: Arizona (ph-1)

LOCATION OF EXPERIMENT: Mesa Experiment Farm, Mesa, Arizona

PERSONNEL INVOLVED: Karl Harris, Leonard J. Erie, and D. C. Aepli

DATE OF INITIATION: 1951 DURATION: 1960

COOPERATION: (See previous annual reports.)

OBJECTIVES: (See previous annual reports.)

NEED FOR STUDY: (See previous annual reports.)

DESIGN OF EXPERIMENT: (See previous annual reports.)

The previous stand of alfalfa was maintained. Two hundred pounds of P_2O_5 were applied. Thirteen irrigations were given during the year. The alfalfa was allowed to go dormant from the middle of July through August. Two light cuttings and five heavy cuttings were harvested. Total plot yields were determined and volume weight measurements were made March 31, 1960.

Tillage treatments:

1. Plow, irrigate, and plant.
2. Plow, disk, drag, irrigate, disk, and plant.
3. Plow, disk, irrigate, and plant.
4. Plow, irrigate, disk, and plant.
5. Plow, irrigate, disk, irrigate, disk, and plant.

EXPERIMENTAL DATA AND OBSERVATIONS:

Volume Weights (Average of 4 replications), 1960

Depth (Inches)	Treatments 1	2	3	4	5
0 - 2	1.46	1.47	1.47	1.47	1.51
2 - 4	1.50	1.52	1.48	1.50	1.56
4 - 6	1.43	1.45	1.42	1.49	1.51
6 - 8	1.37	1.42	1.43	1.43	1.45
8 - 10	1.40	1.42	1.44	1.44	1.45
10 - 12	1.41	*1.32	1.42	1.40	1.38
Mean VW =	1.43	1.43	1.44	1.46	1.48

*Bad sample.

Yield Alfalfa, Tons per Acre, 1960

Treatment	Replications 1	2	3	4	5
1	9.80	10.56	9.11	9.54	9.75
2	9.08	9.53	9.62	9.43	9.42
3	9.56	9.83	10.13	9.31	9.71
4	9.04	9.52	9.58	9.88	9.51
5	9.58	9.63	9.25	9.01	9.37

No significance.

Yield Alfalfa, Tons per Acre

Treatment	Years 1958	1959	1960	Mean
1	9.997	9.957	9.75	9.901
2	9.711	9.594	9.42	9.575
3	9.705	9.969	9.71	9.795
4	10.123	9.584	9.51	9.739
5	9.505	9.390	9.37	9.422

No significance.

COMMENTS AND INTERPRETATIONS:

1. Volume weights, as in previous years, show compaction in the most severely tilled plots even after three years of alfalfa. This compaction extended through 10 inches of soil in treatment 5.

2. Yields were higher on the minimum-tilled soils for 1960. Alfalfa yields for the three years 1958, 1959, and 1960, were higher in the minimum-tilled plots, but differences were not large enough for statistical significance.

TITLE: EVALUATION OF TILLAGE FACTORS

LINE PROJECT: SWC c13-5 CODE NO.: Arizona ph58-10

LOCATION: University of Arizona Mesa Experiment Farm, Mesa, Arizona

PERSONNEL INVOLVED: Leonard J. Erie, Fred French, Karl Harris, ARS, and Dr. Dee Pew, Superintendent Experiment Farm

DATE OF INITIATION: November 1958.

COOPERATION: See 1959 Annual Report.

OBJECTIVES: See 1959 Annual Report.

NEED FOR STUDY: See 1959 Annual Report.

DESIGN OF EXPERIMENT:

Five tillage treatments were initiated on soils planted to wheat. Machinery operations were supervised and various wheel, non-wheel, disk, non-disk, etc., treatments established. Consumtive-use measurements were made on the wheat plots and volume weight measurement were made on the isolated tillage happenings.

Treatments:

Tillage practices

1. Plow, irrigate, plant.
2. Plow, irrigate, disk, disk, plant.
3. Plow, irrigate, disk, plant.
4. Plow, disk, disk, disk, irrigate, plant.
5. Plow, disk, irrigate, plant.

Volume Weight and Yield Treatments

A. Irrigate No disk.

B. Irrigate 1 disk.

C. Irrigate 3 disk.

D. Irrigate 2 wheel.

E. Irrigate 4 wheel plus 1 disk.

F. Irrigate 8 wheel plus 3 disk.

G. 4 wheel + 1 disk Irrigate.

H. 8 wheel + 3 disk Irrigate.

I. 1 disk Irrigate.

J. 3 disk Irrigate.

EXPERIMENTAL DATA AND OBSERVATIONS:

The analysis of variance on yield measurements made on treatments A, B, C, I and J was not significant. Thirty-six hundred volume weight measurements were made involving depths through 14 inches. These measurements were made on four different dates. Each of the 10 treatments was replicated 5 times.

The analysis of variance showed significance between tillage treatments, depths, and an interaction between depths and treatments.

Volume weights for treatments A, B, C, I and J were averaged together, and may for comparison purposes be classified as a standard volume weight. Each volume weight represents a mean of 300 samples.

Depth (inches)	Mean VW Disk Areas A,B,C,I,J	Mean VW Wheel Areas D,E,F,G,H
2-4	1.322	1.526
4-6	1.356	1.574
6-8	1.336	1.495
8-10	1.375	1.467
10-12	1.449	1.483
12-14	1.415	1.424

Treatment Volume Weights
(Each figure represents mean VW for 360 samples)

Treatment	Mean Volume Weight
A	1.374
B	1.367
C	1.371
D	1.470
E	1.507
F	1.502
G	1.500
H	1.496
I	1.400
J	1.371

COMMENTS AND INTERPRETATIONS:

1. The difference in volume weights between the wheel areas and non-wheel areas is highly significant, showing compaction under

the wheels in spite of high organic-matter soils. This characteristic was similar in 1959.

2. No significance in volume weights exists between disk treatments. This was also true in 1959. No differences between initially wet or initially dry plots are noted under disk or tractor-wheel treatments.

3. Good evidence exists that compaction takes place down through ten inches under tractor wheels.

TITLE: DEVELOPMENT AND PERFORMANCE TEST OF LIGHTWEIGHT RATE METER FOR NEUTRON MEASUREMENTS

LINE PROJECT: SWC c13-6

INTRODUCTION:

There has always been an interest in the use of a rate meter to find the count rate of a neutron probe, particularly when used under field conditions. Generally speaking, rate meters are simpler in construction and lighter in weight than scalers. A rate meter has an additional advantage inasmuch as the count rate is directly indicated and the recording operation consists of noting the position of a needle only. In a scaler it is necessary not only to record the count which involves registration of several dials or indicators but also to either time the operation accurately or measure the time over which the count was obtained. In the past, however, rate meters have not been satisfactory because of lack of accuracy, excessive movement of the indicating needle, necessity of frequent replacement of batteries, and lack of stability.

With new techniques in electronic circuitry design available it was decided to make another attempt to develop a satisfactory rate meter. The principal differences with previous designs were to be: (1) The circuitry with solid state devices only, such as transistors, diodes, zener diodes, etc., (2) the operation dependent upon long life, stable mercury batteries, (3) the output of these batteries further regulated by voltage regulating circuitry, (4) weight below 10 pounds, and (5) needle movement reduced by a special circuit so that the operator has no difficulty in deciding what to read out.

Accordingly, the principal design requirements, rough ideas on the nature of the rate meter, expected counting rates, pulse characteristics, and the requirements for high and low voltage of commercially available neutron probes were assembled and a development contract was arranged with the Applied Research Laboratory of the University of Arizona in Tucson, Arizona.

DESCRIPTION:

As a result, first a prototype was built followed by two additional units identical to the prototype with the exception of a few minor improvements. The rate meter thus developed will be designated as the Tempe Rate Meter. It is approximately 7 pounds in weight (see Figure 1) and it employs six mercury batteries approximately 1/2 ounce in weight each. The battery life should be approximately 100 hours of operation. Indication of the condition of the batteries is provided by an appropriate switch and displayed by the meter.

The rate meter has separate switches for the 1320 volt high voltage supply to the neutron tube and a switch for the metering part of the circuit. Both the Troxler Electrical Laboratories and Nuclear-Chicago Corporation type probes can be used in conjunction with the rate meter, provided the discrimination is properly adjusted so as to exclude gamma pulses. This adjustment may vary slightly from one neutron probe to the next. The display meter has been calibrated directly in counts per second and has a maximum range of 200 counts per second. This means that the output of a Troxler type probe can be accommodated at moisture contents up to 40 percent by volume and source strength of 4 millicuries Radium-beryllium. The output of a Nuclear-Chicago type probe can be

accommodated up to a maximum of 40 percent moisture by volume and a source strength of approximately 7 millicuries of radium-beryllium. Obviously, the rate meter has been designed to be used with 2 millicuries radium-beryllium in case of a Troxler probe and 5 millicuries radium-beryllium in the case of a Nuclear-Chicago type probe. There is about 20 percent adjustment in the relationship between frequency and meter output. A different meter range can be easily provided.

Operation of the rate meter is simple. After connection to the probe the control switch is thrown to the count rate position and the position of the needle is observed after approximately 30 seconds. Before reading the needle, however, a time constant switch is depressed which results in a braking action on the needle, causing it to virtually stand still. Measurements thus obtained have a precision of approximately 2 percent. If greater precision is required, the push button is held down for an additional 30 seconds which results in readings having a precision of approximately 1 percent.

PERFORMANCE:

Comparison with actual scaler readings show that the rate meter indications agree perfectly with those obtained from a scaler. This proves that there is equally good precision if the rate meter is used instead of a scaler (see Figure 2).

Studies have been made of the effect of ambient temperature on the rate meter performance. It was found that these effects are minor but not completely negligible, of the order of about 2 to 3 percent. Such effects can be easily overcome by always referring to a neutron standard. The temperature effect was investigated over a range from zero to 40 degrees Centigrade.

The development and performance testing of the rate meter has been concluded except for a phase of field testing at other locations. A complete technical description of the device is on hand and an abbreviated description will be prepared as soon as field check data are on hand.

PERSONNEL: C. H. M. van Bavel

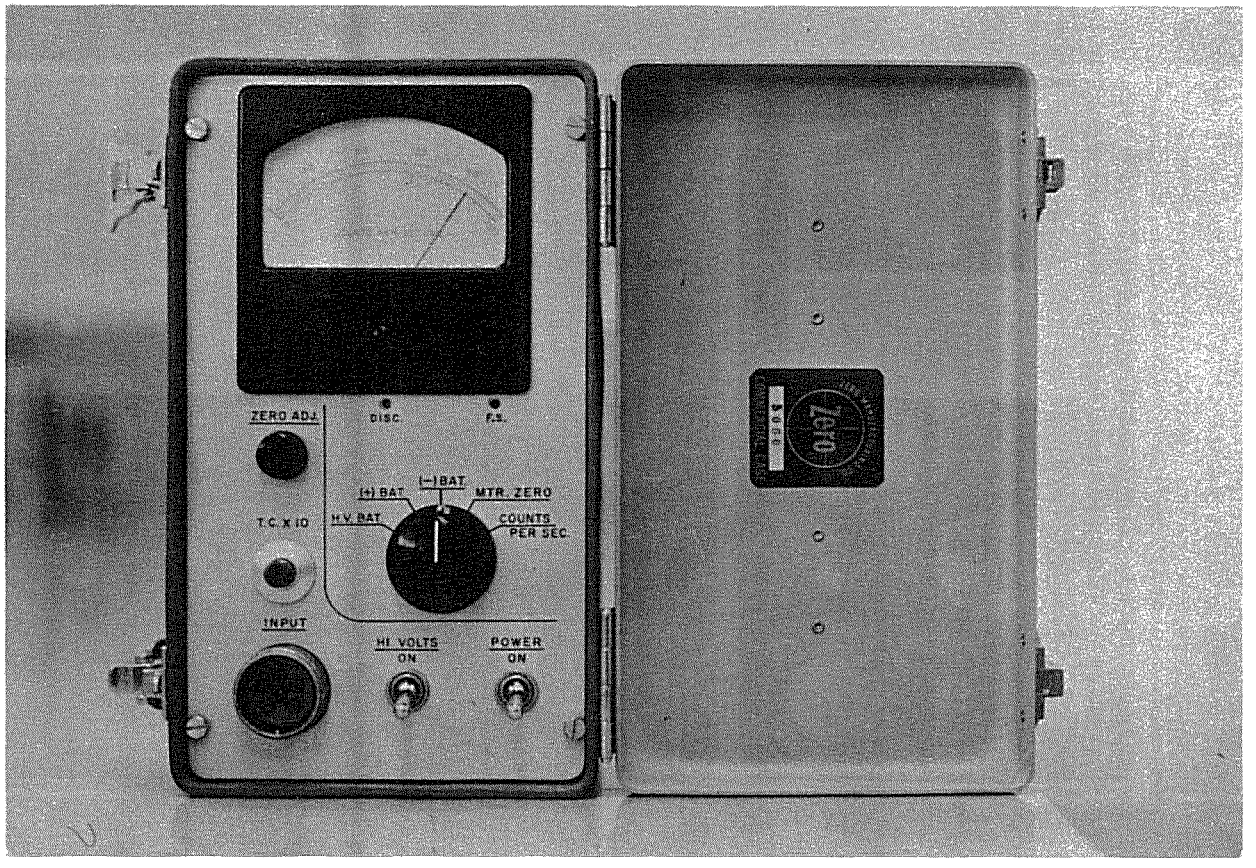

Figure 1. The Tempe rate meter.

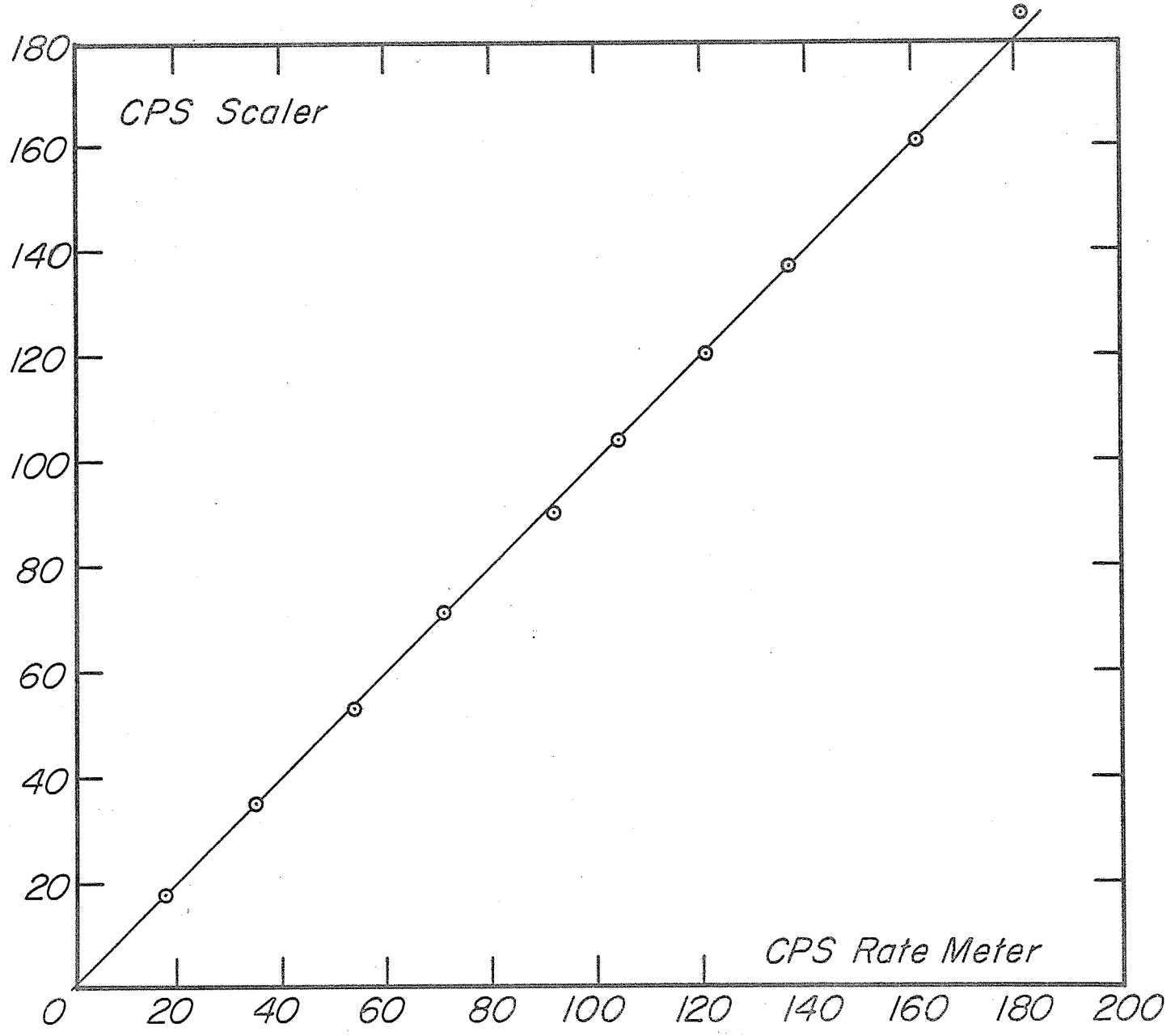

Figure 2. Rate meter versus scaler readings obtained with a [illegible] neutron probe.

Annual Report of the U.S. Water Conservation Laboratory

TITLE: CALIBRATION AND COMPARATIVE EVALUATION OF TWO NEUTRON DEPTH PROBES.

LINE PROJECT: SWC c13-6

INTRODUCTION

Even though two types of neutron depth probes, one supplied by the Nuclear-Chicago Corporation and the other by Troxler Electrical Laboratory, have been in use for some time, a direct comparative evaluation on the two designs has not been available. Furthermore, in the past calibrations of such probes have generally been carried out either under field conditions or with artificially prepared bodies of soil which may not have been sufficiently large. The procedures leading to an exact calibration were not known. When it was discovered that an investigation along the latter line was planned by Dr. Nielsen of the California Agricultural Experiment Station at Davis, California it was decided that it would be advantageous to pursue the above two objectives by a joint effort which included work at both sites and an interchange of equipment.

CALIBRATION

The procedure followed was straightforward but tedious. Bodies of soil were made up of increasing size at different moisture contents. Particular care was taken that the soil would be homogeneous and that the moisture content on a volume basis was accurately known. Once a soil mass was ready, an access tube would be installed for the two types of probes investigated and a measurement was carried out. Counting rates were determined with different scalers and it was found that this did not introduce any variation in the results.

It could be concluded that for both types of probes it is necessary to calibrate with bodies of soil that exceed dimensions of approximately 120 cm, be they cylindrical or cubic. This statement is particularly true at low moisture contents, below .10 by volume. The calibration curves which were obtained for the two types of probes must be considered as quite accurate and since they were expressed both as absolute counting rates and as counting rates referred to standard of known dimensions, they should prove to be of interest to others working with these types of probes.

The calibration curve for the two types of probes is different. The calibration for the N-104 probe (Troxler Electrical Laboratory) is almost linear except the very first part at quite low moisture contents. The P-19 centered-source probe (Nuclear-Chicago Corporation) shows a sigmoid calibration line. Further comparisons of the two calibrations brings out the fact that the N-104 probe is from 2 1/2 to 3 times more efficient in terms of slow neutrons counted per unit strength of the fast neutron source (see Figure 2).

From the latter finding it is concluded that the end-source probe design is definitely preferable because it gives the highest counting rate at the lowest cost and at the lowest exposure hazard. The end-source probe is simple to construct and can be serviced more easily because the source can be detached from the probe itself by unscrewing the source capsule located at the end of the probe. Adequate counting rates can be obtained with the N-104 probe with sources as small as 2 mc and in certain cases even 1 mc could be considered satisfactory.

The exposure hazard from a 1 mc radium source encapsulated in a minimum amount of lead is close to nominal.

TRANSLATING SOLUTIONS

Additional work was done on the substitution of neutron absorbing solutions for actual soil masses in calibrating neutron probes. It was found that satisfactory use can be made of solutions of cadmium salts, such as cadmium chloride or cadmium sulfate, or of boron salts, in this case the only practical choice being boric acid. However, the highest possible concentration of boric acid corresponds to a moisture content which is still appreciable and it is not possible to calibrate neutron probes down to low moisture contents using boric acid. This objection does not apply to the use of cadmium salts which, on the other hand, are somewhat more expensive and require non-metallic containers.

The comparative study with the two types of probes showed that relationship between concentration of a neutron absorber and the corresponding soil moisture content is considerably different in different types of probes. This means that the use of neutron absorbing solutions can only be used to find the calibration of a probe if a calibration of the same type probe is available and which is based on an actual knowledge of soil moisture content. Therefore, the use of solutions is limited in usefulness to: (1) The verification of the behavior of a probe that has been previously calibrated in soil or, (2) the calibration of a probe by comparing it with another one of an identical construction, excepting source strength, which has been calibrated in

soil. In the latter case, however, recourse must be had to a standard to eliminate the effect of differing source strengths on the absolute counting rate.

Additional details on this investigation are reported in an article by C. H. M. van Bavel and D. R. Nielsen which has been submitted to the Proceedings of the Soil Science Society of America (Laboratory Publication No. 19).

PERSONNEL: C. H. M. van Bavel

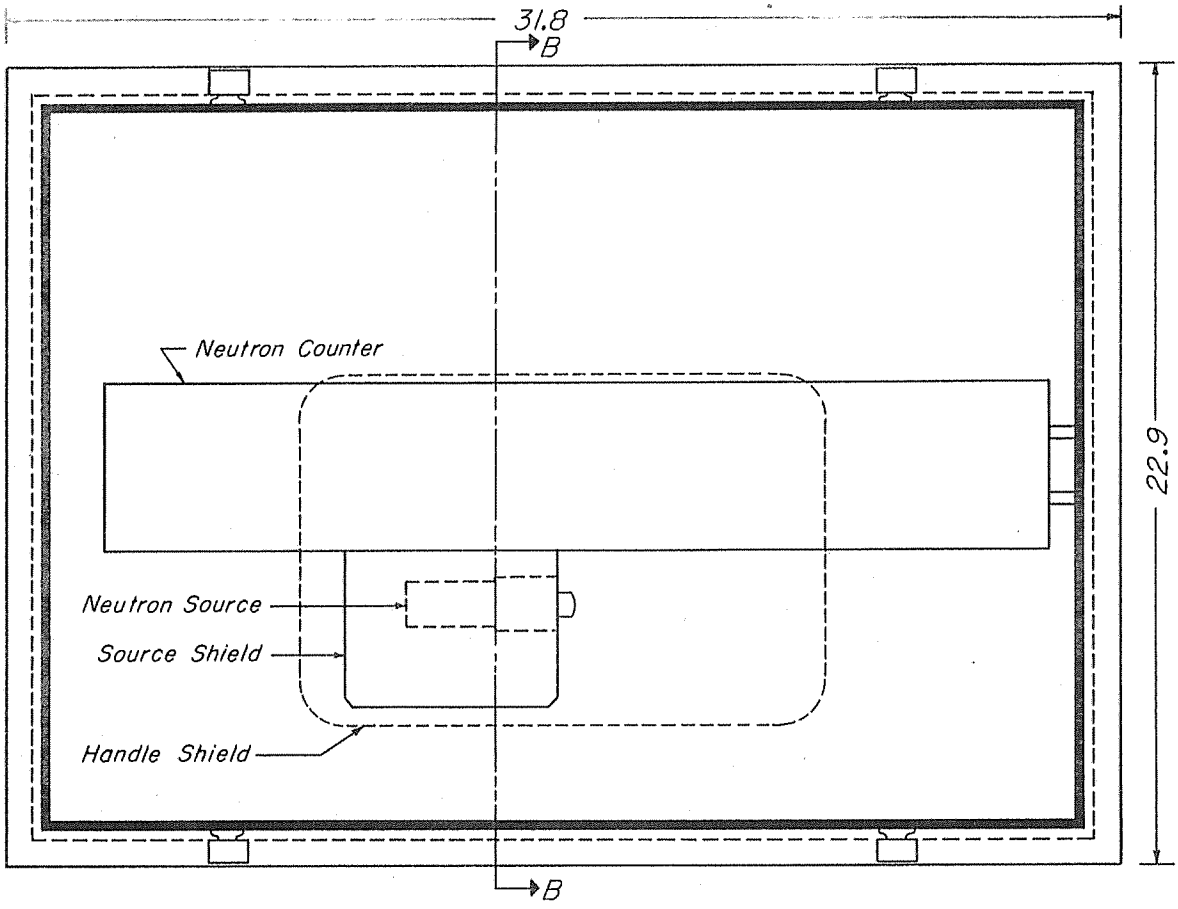

Bottom View Section AA

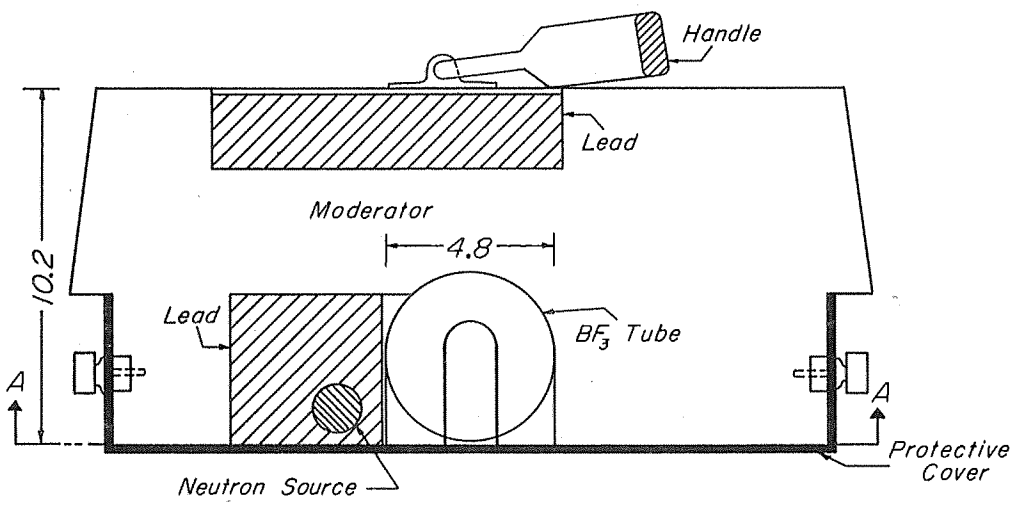

Side View Section BB

Neutron Probe

(Dimensions in CM)

Figure 1. Probe dimensions.

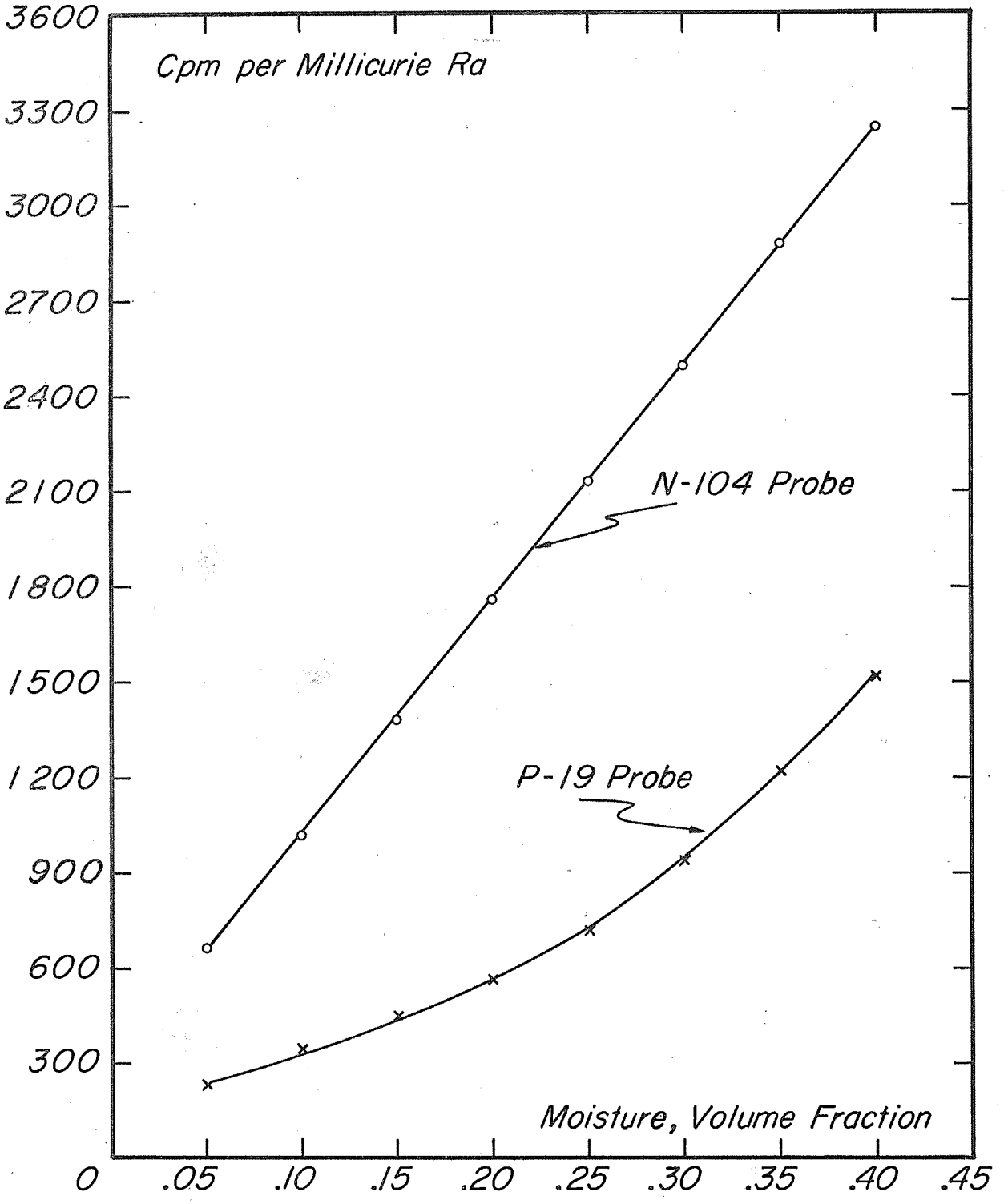

Figure 2. Comparison of probe efficiency.

TITLE: EVALUATION OF SURFACE NEUTRON PROBE

LINE PROJECT: SWC C13-6

INTRODUCTION

Inasmuch as the commonly used depth probes for neutron measurements of soil moisture content are not capable of indicating the moisture content of the surface layer, there has always been considerable interest in a surface neutron probe. Historically, attempts to develop this method are as old as the neutron method itself, going back to 1950. More recent attempts in this direction are represented by a commercial probe available from Nuclear-Chicago Corporation and published work by Phillips in Iowa and by Marais in the Union of South Africa. In the present report an account is given of an evaluation of a simple surface probe which consists of a modification of a Troxler Electrical Laboratories depth probe by means of a hydrogenous shield. This adaptor has also been marketed by Troxler Electrical Laboratories but no evaluation of this device has been available.

APPARATUS

The adaptor, as commercially available, consists of a hydrogenous shield fitting over the source counter assembly. Furthermore, there is a solid block of hydrogenous material which is advertised as the standard. It turns out, however, that this standard is absolutely unnecessary because an adequate standard counting rate can be obtained by suspension of the probe itself in air, the counting rate as obtained being caused by the hydrogenous shield over the counter.

The depth probe is converted into a surface probe by disassemblying the source capsule, fitting the counter-amplifier assembly into the

surface adaptor, and taking the source out of the capsule and pressing it into another lead capsule especially made for the purpose. It fits contiguously to the counter into the hydrogenous shield. The assembled surface probe weighs approximately 8 1/2 kilograms and is illustrated in Figure 1.

A series of evaluation tests and experiments were made as follows:

a. Calibration, investigating precision, linearity, and sensitivity.

b. Depth of measurement.

c. Effect of moisture stratification.

d. Effect of irregularities in the soil surface.

CALIBRATION

Calibration of the surface probe described heretofore was accomplished by placing it on homogeneous bodies of soil that were 30 cm deep. It was found that a strictly linear relationship exists between the counting rate and the moisture content on a volume basis, see Figure 2. Furthermore, it turns out that the sensitivity of the device is as good as that of a depth probe. Calculations show that adequate results could be obtained with a surface probe containing a one millicurie RA-Be source. If it is desired to express the results on a standard basis, this may be done conveniently by using the counting rate in air as a standard. In either case, the accuracy of a device appears to be somewhere between 1/2 and 1 percent of moisture on a volume basis.

DEPTH OF MEASUREMENT

The depth of measurement was evaluated by making measurements on homogeneous soil blocks of known moisture content and reducing the thickness of these by layers and relating the counting rate to the

resulting extent of the soil layer.

It was found that the moisture content of the soil itself has no obvious bearing on the depth of measurement. In all cases increasing the thickness of the soil over 15 cm had no effect on the counting rate. The first few centimeters of soil have the greatest effect on the counting rate and from there on the counting rate is but little increased by increasing the depth of soil up until the 15-centimeter depth is reached, which represents, for all practical purposes, an infinitely thick layer, see Figure 3.

MOISTURE STRATIFICATION

The effect of moisture stratification was examined by preparing stratified soils that were obtained by natural drying, in which case a smooth distribution of moisture resulted, or by artificially depositing a wet or a dry layer of soil on a dry or wet layer. The thickness of the layers was varied as well as their moisture content. A table is shown, based upon two cases pertaining to abruptly changing moisture content and a third to smooth distribution of moisture, demonstrating that there is no clear-cut relationship between the indicated moisture content as derived from the surface neutron probe and the average moisture content of the top 7.5 cm.

Comparison of moisture content measured with surface neutron probe to actual values for the surface 7.5 cm.

	Indicated Moisture	Actual Moisture	Difference
	.155	.290	-.135
	.050	.104	-.054
Dry over Wet Soil	.115	.077	+.038
	.050	.048	+.002
	.040	.036	+.004
	.250	.238	+.012
	.350	.367	-.017
Wet over Dry Soil	.375	.404	-.029
	.245	.238	+.007
	.410	.417	-.007
	.180	.141	+.039
Soil Drying at	.150	.147	+.003
the Surface	.130	.121	+.009
	.120	.096	+.024

Calculating the moisture content of soil in any other way may in some cases provide better agreement but not in others. The closest one can come is by comparing the indicated moisture content and the average moisture content of the surface 7.5 cm of soil. However, the disagreement between indicated and true values is still such that one must conclude that the indicated moisture content in the case of stratified soils is only a good estimate of the true moisture content.

In natural circumstances, stratification is more the rule than the

exception. Surface drying results in considerable stratification of moisture in the top few centimeters. Small amounts of rainfall on relatively dry soil results in very sharp boundaries between wet and dry soil in the surface few centimeters. Soil compaction and changes in soil texture may also have similar effects. Therefore, it is concluded that the usefulness of the surface neutron probe as an exact instrument is limited to cases where one is reasonably sure that the moisture distribution in the surface is homogeneous. In other cases, one can only speak of a relatively crude estimate.

SURFACE IRREGULARITY

The irregularity of the surface upon which the probe is placed also has a pronounced effect on the indicated moisture content. Experiments with corrugation of the surface and purposely tilting the probe away from the surface all indicated that counting losses as high as 10 to 20 percent are found if the probe is as little as 1 centimeter away from the surface, either at one point or at a number of points such as would be the case if the surface is corrugated or generally irregular. To get representative readings it is considered an absolute necessity that the surface is as flat as one can obtain it and it is probably desirable to actually press the probe into or against the soil surface.

The investigation of surface neutron probe characteristics has been concluded. Further details may be found in a publication which will be submitted to the Journal of Geophysical Research.

PERSONNEL: C. H. M. van Bavel.

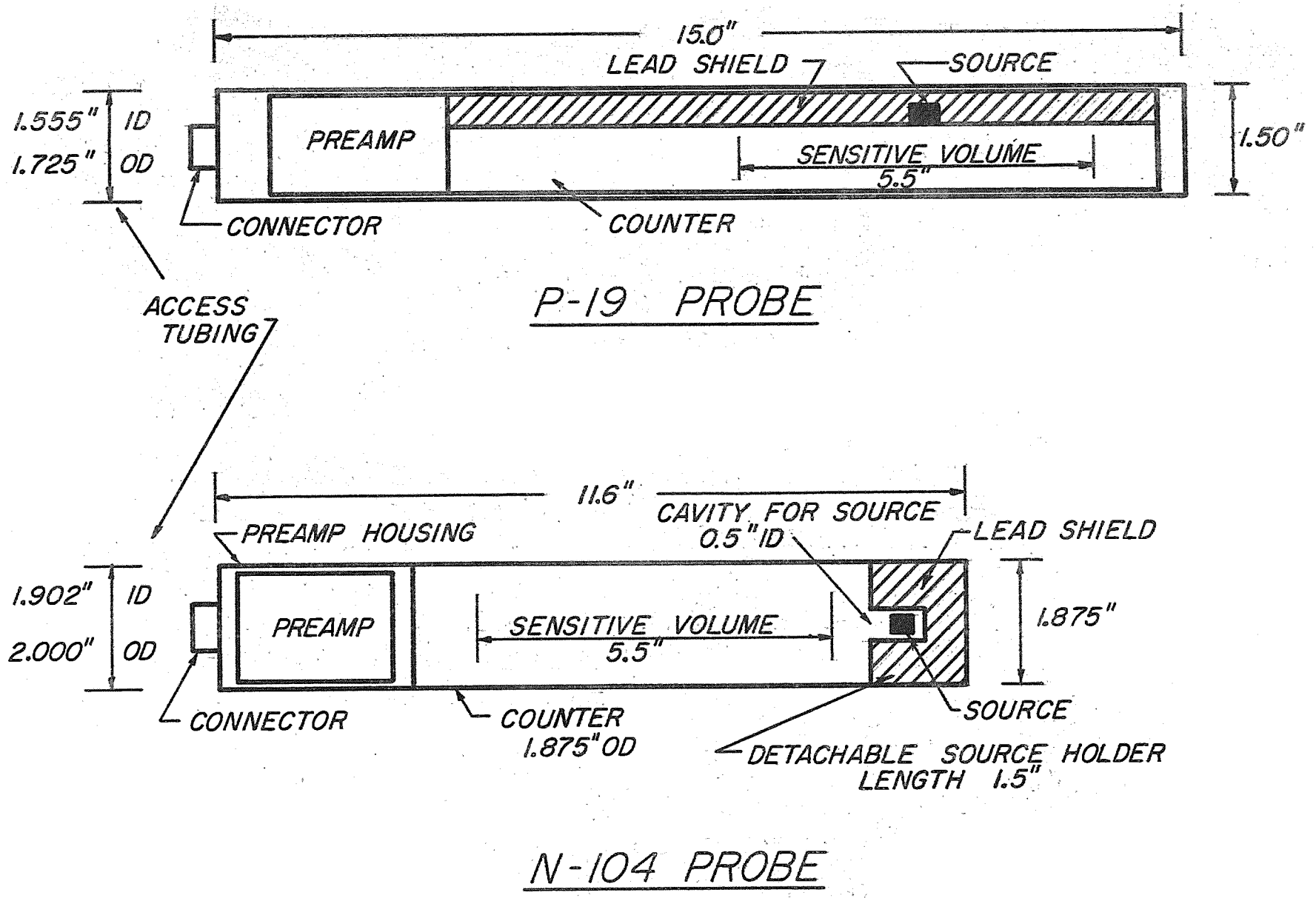

Figure 1. Schematic of surface probe.

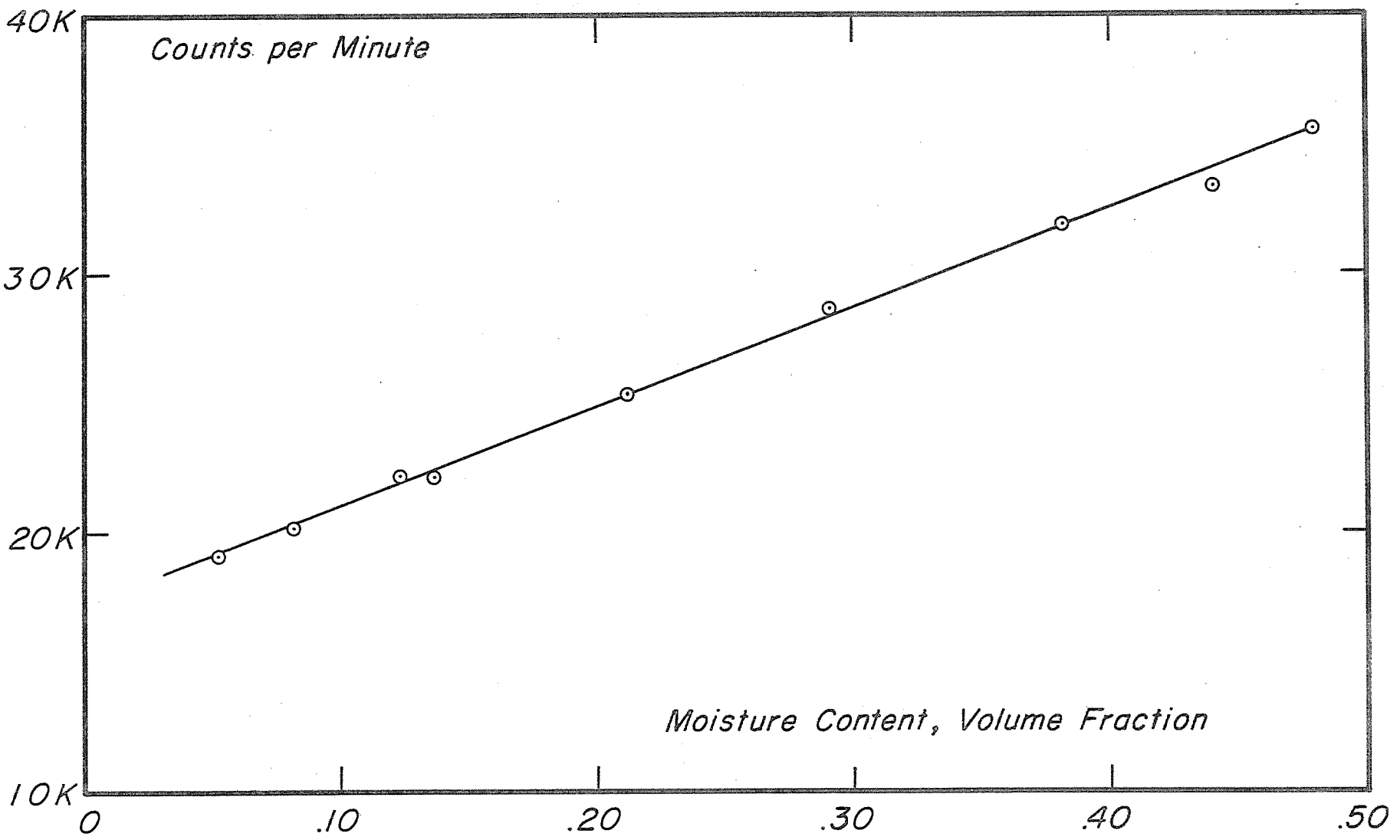

Figure 2. Calibration of surface neutron probe.

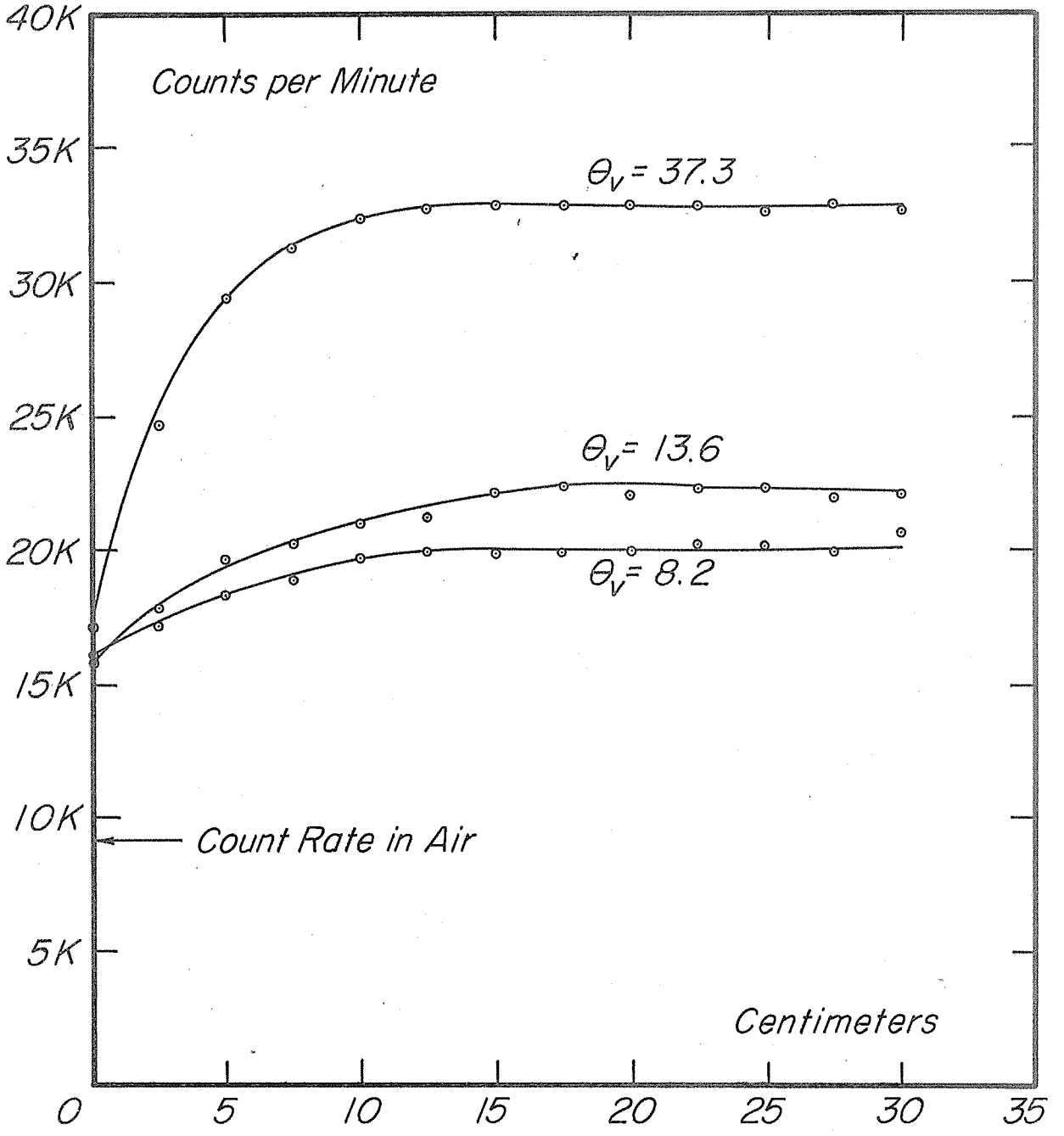

Figure 3. Effect of depth of soil on surface neutron probe indication.

TITLE: THE DESIGN AND EVALUATION OF A SMALL, ECONOMICAL PRESSURE CELL FOR THE DETERMINATION OF THE MOISTURE CHARACTERISTIC OF SOIL CORES.

LINE PROJECT: SWC c13-6

INTRODUCTION

The moisture characteristic of field soils, particularly at slightly less than atmospheric pressure potentials, should be determined using samples that have not been appreciably disturbed. Such samples are commonly obtained with some sort of cylinder sampler (core sampler) and equipment is required whereby the changing moisture content of the core sample can be measured as the pressure potential is varied.

The pressure cell principle as first proposed by Richards (2) is suitable and practical for such a purpose. It must be remembered that the equilibration time of a soil column in a pressure cell is dependent upon its height, Gardner (1), and for the procedure to be practical, column heights in excess of 4 or 5 cm are undesirable, thus limiting the size of the core sample to modest proportions. To find the time of equilibration and the final moisture content of the core sample, weighing is least conducive to errors. However, it is not practical to remove the core from its support for this purpose because of the difficulty of re-establishing good hydraulic contact between sample and porous plate.

Therefore, a small and simple pressure cell was designed that could be weighed in its entirety with adequate precision. Also, we aimed at an economical piece of equipment that would be suitable for use in testing laboratories.

METHOD

Figure 1 shows the dimensions and assembly of the pressure cell. It is designed for the use of brass retainer cylinders as used in the soil sampler specified by the U. S. Salinity Laboratory (3). These cylinders are made of 19 gage brass (0.11 cm), 1.180 inches (3.00 cm) high and 2.250 inches (5.72 cm) in outside diameter. For other size retainer cylinders, the proper dimensions have to be worked out.

The porous plate is supported on the lucite bottom part, which is grooved for drainage. An O-ring prevents entry of air into the part of the cell below the porous plate. The top part of the cell, also made of lucite, is clamped to the bottom part with two clamps, thus securing the retainer cylinder to the porous plate and insuring the O-ring seal between plate and bottom. Two types of porous plates are used, ceramic and stainless steel. Ceramic plates are used where the moisture characteristic of a soil core from zero to -1000 mb is desired, as the ceramic has a bubbling pressure of about 1400 mb. If, however, the moisture characteristic from zero to -200 mb is desired, stainless steel plates are used, since the equilibration time is much smaller than with the ceramic plate. O-rings in the side of both the top and the bottom part secure the retainer ring sideways and prevent escape of air when the cell is pressurized.

Regulation and measurement of air pressure in the cell can be done in several satisfactory ways. We use a regulator for zero to 1000 mb operating range with a precision of about 2 mb. A central supply of compressed air is available. Pressure is measured with a precision gage

with divisions for every 5 mb and a sensitivity of 2.5 mb. A small supply of water is kept in the regulated pressure line to prevent desiccation of the sample by back diffusion.

The time for equilibrium is determined by the conductance of the porous plate or of the soil core, whichever is smaller. The ceramic plate has a conductance of 0.025 g hr^{-1} mb^{-1} and a conductivity of about 5×10^{-4} cm hr^{-1}; thus, at low pressures, the plate will limit the outflow rate for many soils. However, the conductance of the porous stainless steel plate is 68.9 g hr^{-1} mb^{-1}, while its conductivity is 0.7 cm hr^{-1}. The stainless steel will probably not affect the outflow rate of most soils significantly even at a pressure potential close to zero.

With a soil core in the cell, data shows that if pressure intervals corresponding to moisture content changes of about 0.030 volume fraction are chosen, equilibrium will require one to two days with the ceramic plate and 10 to 20 hours with stainless steel plates.

CONCLUSION

This project is considered complete and a full account will be given in an article in the Proceedings of the Soil Science Society of America (Laboratory Publication No. 25). It is felt that the equipment developed is simple, accurate and economical and suitable for any laboratory engaged in soil physical measurements.

LITERATURE

1. Gardner, W. R. Calculation of capillary conductivity from pressure plate outflow data. Soil Sci. Soc. Amer. Proc. 20: 317-320. 1956.

2. Richards, L. A. Porous plate apparatus for measuring moisture retention and transmission by soil. Soil Sci. 66: 105-110. 1948.

3. U. S. Department of Agriculture. Diagnosis and Improvement of Saline and Alkali Soils. Handbook No. 60: 159. 1954.

PERSONNEL: R. J. Reginato and C. H. M. van Bavel.

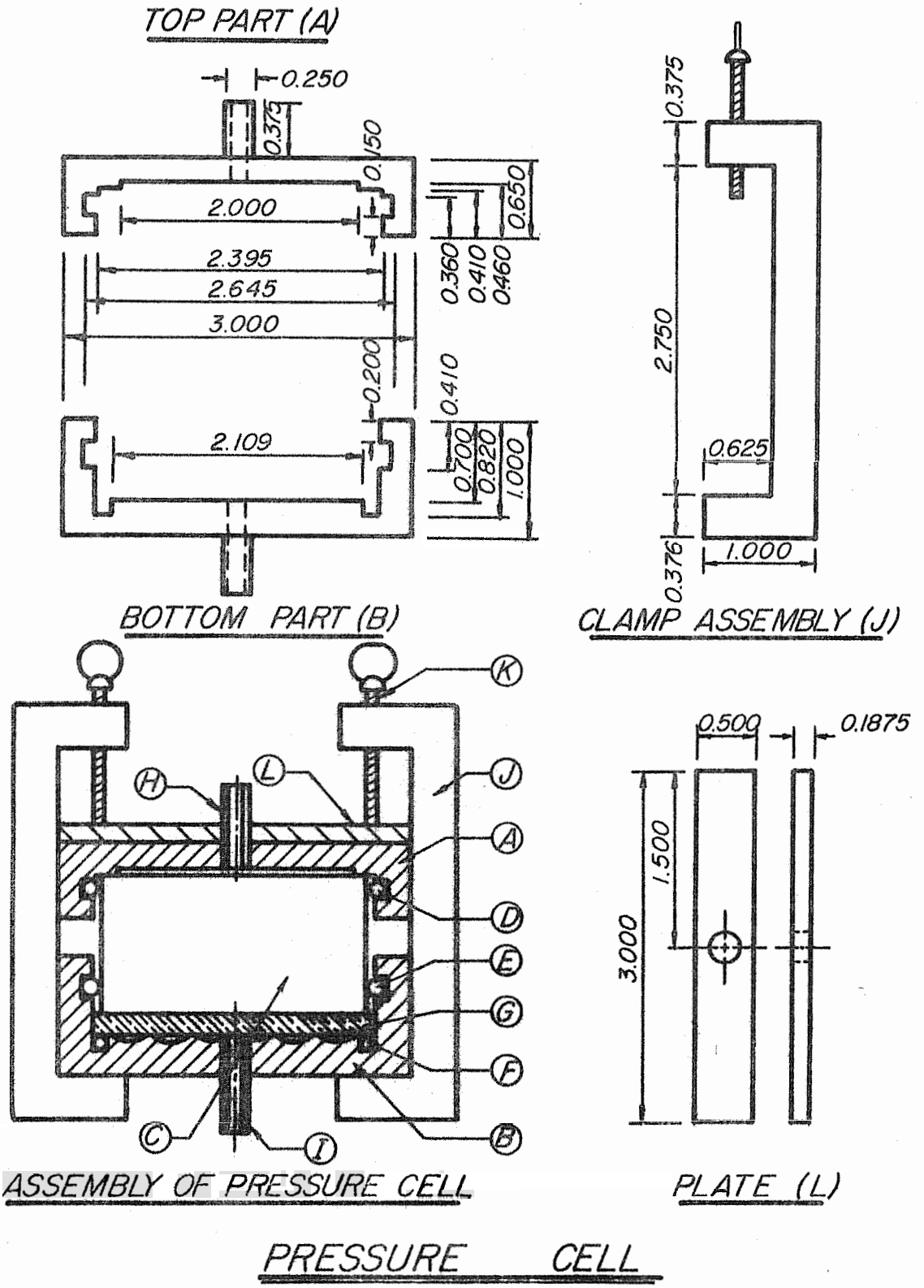

Annual Report of the U.S. Water Conservation Laboratory

Figure 1. Assembly of pressure cell and dimensions in inches.

TITLE: MEASURING THE SOIL-WATER DIFFUSIVITY OF SOIL CORES WITH A SMALL PRESSURE CELL

LINE PROJECT: SWC c13-6

INTRODUCTION:

The problem is to measure the diffusivity of undisturbed soil cores in the pressure potential range of 0 to -0.3 bar, with a maximum ease of operation and a minimum expenditure of time and equipment. Methods presently used, Gardner (1), are not adequate for this pressure range.

For a perliminary study, the pressure cell described by Reginato and Van Bavel (Laboratory Publication No. 25) was used to determine the moisture diffusivity of disturbed soil cores. It was throught that if the diffusivity and the moisture characteristic could be determined simultaneously on the same sample, a great saving in time could be realized for laboratories engaged in routine soil physical measurements. If the soil-water diffusivity and the slope of the moisture characteristic curve are known at a specific moisture content, the unsaturated conductivity can be calculated.

Three methods for determining the diffusivity were used; one involving steadystate measurements and two involving transient measurements.

STEADY STATE METHODS:

In the steady state method a core was initially saturated with water and the inlet and outlet tubes of the cell were connected by a continuous water column to reservoirs. Both of the reservoirs were placed at an elevation lower than that of the cell. A small air hole in the soil core retainer ring allowed the sample to become desaturated when negative

pressure was applied. A head difference was maintained between the inlet and outlet reservoirs and when the outflow was at a constant rate, the system was said to be at equilibrium. The unsaturated conductivity could then be calculated from Darcy's law.

In one case, 34 days were required for the outflow to become constant. In other cases constancy was not attained at all, possibly due to bacterial growth clogging the soil pores. The long time required to reach steady state conditions was also reported by Moore (3). His samples took 4 to 5 days to attain equilibrium. Richards' (5) samples took as long as 5 months to reach equilibrium.

Precautions were taken to reduce bacterial growth. This did not appear to shorten the equilibrium time. The steady state method using the present equipment was abandoned because it was felt that this procedure was too time consuming and could not be readily adapted to a relatively rapid routine laboratory procedure.

TRANSIENT STATE METHODS:

The first transient procedure tried was an inflow-outflow method. A soil core was placed in the pressure cell and saturated with water. The inlet tube of the cell was connected to a regulated air pressure system, and the outlet tube to a calibrated capillary tube. The procedure was to increase the air pressure by a known amount and to measure the time rate of advance of the air-water interface in the capillary tube. Conversely, the air pressure was reduced and the rate of inflow measured. This procedure did not prove satisfactory because long capillary tubes were required to obtain good outflow versus time data.

In the second transient method the outflow was measured at successive time intervals by weighing. The procedure consisted of placing the cell on a sensitive balance with the inlet tube connected to a regulated air pressure system and allowing the outflow to drip into a tube which removes the water without interfering with the weighing of the cell. The air pressure is increased by a known amount and the loss of weight of the cell is recorded. An accurate balance and timer are required. The soil water diffusivity may then be calculated from the outflow versus time data using equations presented below.

Two different equations were used to evaluate the data. The first was the Ostashev equation for an infinite column, as reported by Kirkham-Feng (2).

$$Q_t = 2\ AC_o\ \sqrt{Dt/\pi}$$

in which Q_t is the accumulated outflow, A the cross sectional area of an infinitely long tube, C_o the change in volumetric moisture content, D the diffusivity, and t the time.

Assuming that this equation may apply for small values of t to a column of finite length, L, and substituting for C_o by Q_o/LA we find:

$$Q_t = (2\ Q_o/L)\ \sqrt{Dt/\pi} \qquad [1]$$

henceforth referred to as the Ostashev equation. Equation [1] can be written as

$$(\pi/4)\ (L\ Q_t/Q_o)^2 = Dt,$$

therefore, a plot of the lefthand term versus t can be used as a test of adequacy for [1]. It should give a straight line.

The second equation is that proposed by Gardner (1):

$$Q_t = Q_o\ [1-(8/\pi^2)\ \Sigma\ (1/n^2)\exp(-\alpha^2 Dt] \qquad [2]$$

where $n = 1, 3, 5, \ldots$, $\alpha = n\pi/2L$, L is the length of the sample, and the other symbols as previously described. Rearranging, we obtain

$$(Q_o - Q_t)\ \pi^2/8Q_o = (1/n^2)\ [\exp(-\alpha^2 Dt)]$$

where $n = 1, 3, 5, \ldots$, or

$$(Q_o - Q_t)\ \pi^2/8Q_o = \exp(-\alpha^2 Dt) + (1/9)\exp(-\alpha^2 Dt) + (1/25)\exp(-\alpha^2 Dt) + \ldots \quad [3]$$

Since $\alpha = n\pi/2L$, then

$$\alpha^2 = n^2(\pi/2L)^2 = (0.2742)n^2 \quad [4]$$

for a 3 cm sample.

Now if we let

$$C = (Q_o - Q_t)\pi^2/8Q_o \quad [5]$$

and substitute [4] and [5] into [3] we obtain

$$C = \exp(-0.274\ Dt) + (1/9)\exp(-2.47\ Dt) + (1/25)\exp(-6.86\ Dt) + \ldots \quad [6]$$

Since the infinite series converges rapidly, Gardner (1) states that after a few hours only the first term is of any importance so he neglects the other terms and solves equation [6] explicitly. However, for short periods some of the other terms cannot be neglected. When more than the first term is considered, equation [6] cannot be solved explicitly; rather, it must be solved graphically. This is accomplished by judiciously choosing values of Dt and plotting them against C (Figure 1). To calculate diffusivity one measures t, Q_t, and Q_o on a sample and from equation [5] calculates C. From Figure 1, Dt is obtained, and from the value of t the diffusivity can be obtained.

To test the applicability of equation [6] one checks to see if the calculated values of diffusivity are constant with time.

RESULTS OF THE WEIGHING OUTFLOW METHOD:

Tests were made on a disturbed sample of Pachappa sandy loam. Data from one run of the weighed outflow method are given in Table 1.

The initial pressure, P_i, was 10 mb and the final pressure, P_f, was 60 mb. The total outflow, Q_o, was 3.43 g.

For evaluating the Ostashev equation [1], a plot of $(9\pi/4)(Q_t/Q_o)^2$ versus t is shown in Figure 2. Up to a value of t = 3 minutes the points fit a straight line. From its slope a value of D = 1.46 $cm^2 min^{-1}$ is derived. After t = 3 min the equation does obviously not apply, meaning that the assumptions made are no longer valid. These are that the column behaves as if it were infinitely long and that D is a constant.

The Gardner equation was tested with the aid of Figure 1 and D calculated for each value of Q_t. The Table 1 shows that up to t = 3.5 min the calculated value of D is the same. Since the theory here is exact, the deviation beyond t = 3.5 min means that D is not constant, invalidating equation [2]. The average value of D from t = 0 up to t = 3.5 min is 1.36 $cm^2 min^{-1}$ which agrees closely with the value derived from the Ostashev equation.

SUMMARY:

The steady state procedure was rejected as a routine laboratory practice, as the time involved to reach equilibrium was too large. Of the two transient methods, the pressure inflow-outflow method was abandoned because of the difficulty of a sensitive measurement of outflow when the outflow was large. In order to measure an outflow of 2 or 3 grams of water with sufficient sensitivity, quite a long capillary tube would be required. The transient weighed outflow method appears to be satisfactory. The apparatus is simple and requires little time.

It appears that both the Ostashev and the Gardner equation will give consistent values of diffusivity for over the first few minutes. However, the use of the Ostashev equation requires much less computation than that of Gardner's.

We plan to test various soils by the weighed outflow method, using pressure increments on the order of 10 to 20 mb and time intervals up to 5 or 10 minutes. The method looks promising.

REFERENCES:

1. Gardner, W. R. Calculation of capillary conductivity from pressure outflow data. Soil Sci. Soc. Amer. Proc. 20:317-320. 1956.
2. Kirkham, D. and Feng, C. L. Some tests of the diffusion theory, and laws of capillary flow in soils. Soil Sci. 67:29-40. 1949.
3. Moore, R. E. Water conduction from shallow water tables. Hilgardia 12:383-426. 1939.
4. Reginato, R. J. and Van Bavel, C. H. M. Pressure cell for soil cores. Preprint, SWCL Publ. No. 25.
5. Richards, L. A. Capillary conduction of liquids through porous mediums. Physics 1:318-333. 1931.

PERSONNEL: R. J. Reginato, C. H. M. van Bavel, R. D. Jackson

Table 1. Calculation of D (diffusivity) for Pachappa sandy loam for a pressure increment from 10 to 60 mb.

t	Q_t	D (Gardner)	D (Ostashev)
min.	g.	$cm^2 min^{-1}$	$cm^2 min^{-1}$
0.145	0.55	1.19	1.27
0.19	0.65	1.30	1.34
0.23	0.75	1.47	1.48
0.28	0.85	1.50	1.57
0.37	0.96	1.49	1.49
0.50	1.06	1.26	1.36
0.68	1.16	1.16	1.20
1.00	1.29	0.98	1.00
1.18	1.36	0.93	0.95
1.57	1.47	0.82	0.83
1.94	1.69	0.85	0.89
2.13	1.86	0.99	0.98
2.27	1.97	1.06	1.03
2.34	2.03	1.09	1.06
2.57	2.15	1.12	1.08
2.71	2.19	1.09	1.06
3.15	2.30	1.07	1.01
3.51	2.36	1.01	0.96
4.03	2.40	0.90	0.86
4.69	2.47	0.84	0.79
5.58	2.53	0.75	0.69
6.52	2.61	0.69	0.63
16.00	2.86	0.37	0.31
27.80	2.93	0.22	0.19
38.90	3.02	0.18	0.14
127.00	3.25	----	0.05

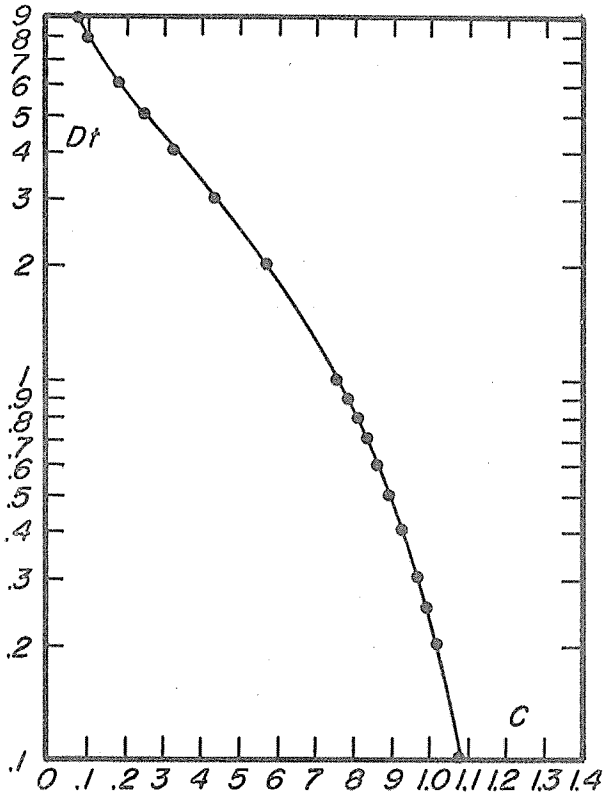

Figure 1. Graph of equation [6] for obtaining diffusivity values from outflow measurements.

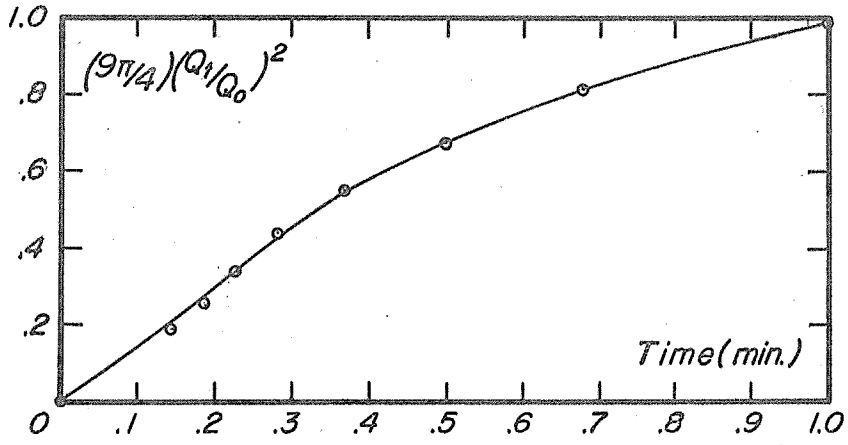

Figure 2. Plot of $(\pi/4)\ (LQ_t/Q_o)^2$ versus time, t, for the weighing outflow method in the pressure range 10-60 mb for Pachappa sandy loam.

TITLE: THE USE OF SALTY WELL WATER FOR THE PRE-PLANTING IRRIGATION ON SILTY CLAY SOILS

LINE PROJECT: SWC c14-2 CODE NO.: Arizona (ph-7)

LOCATION: University of Arizona, Safford Experiment Farm, Safford, Arizona.

PERSONNEL INVOLVED: Karl Harris, Leonard Erie, O. F. French, D. F. McAlister, L. C. Chapman

DATE OF INITIATION: April 1, 1958

COOPERATION: Erie, Harris, and French are in charge of the experiment. They are responsible for taking detailed records and supervising the general conduct of the experiment. Messrs. McAlister and Chapman provide Arizona Agricultural Experiment Station land, water, and labor to accomplish general irrigation, cultivation, and similar aspects of crop production.

OBJECTIVES: (See previous annual report.)

NEED FOR STUDY: (See previous annual report.)

DESIGN OF EXPERIMENT:

Basic leaching treatments used when planting barley for the first half of 1960 and sorghum the last half of 1960:

A. Apply 8 inches of well water.

B. Apply 12 inches of well water.

C. Apply 18 inches of well water.

D. Apply 24 inches of well water.

EXPERIMENTAL DATA AND OBSERVATIONS:

Harlan barley was planted November 16, 1959 and harvested June 18, 1960. A leaching irrigation and two subsequent irrigations were given. Soil-salt samples were taken from the middle of the upper, middle, and lower one-third of each plot. These samples were taken before each

irrigation and after the last irrigation. Field measurements were made. Seeds per head and size of seeds were determined.

Salt Analysis, Safford Leaching Water

Date	Well Water PPM
November 17, 1959	3231
March 16, 1960	3069
April 21, 1960	2815
July 6, 1960	2906
August 10, 1960	3123

Barley Yield per Acre (Lbs.)

Treatment	Replications 1	2	3	4	Mean
A	3172	2817	3333	3448	3193
B	3809	3888	3934	3496	3782
C	4084	4194	3951	3460	3922
D	4248	4008	3797	3356	3852

Sig. 5%
LSD = 645 lbs.

Forty Head Weight (gms.)

Treatment	Replications 1	2	3	4	Mean
A	49.5	51.4	53.0	57.3	52.8
B	52.0	49.7	47.5	58.0	51.8
C	52.8	53.1	56.4	61.8	56.0
D	57.1	69.5	59.0	63.9	62.4

Sig. 1%
LSD = 5.66 gms.
7.63 gms.

Seeds per Head

Treatment	Replications 1	2	3	4	Mean
A	30.20	30.78	32.20	34.50	31.92
B	31.35	29.75	29.88	34.88	31.63
C	31.65	31.50	33.60	37.00	33.44
D	33.55	40.50	34.65	37.30	36.50

Sig. 5%
LSD = 3.21
4.62

Four varieties of sorghum (NK3000, AMAK R-10, RS-610, and Texas 650) were planted in rows 20-inches wide on July 6, 1960. A leaching irrigation was commenced the same day. The four leaching treatments were 7, 10, 15, and 15 inches respectively, for treatments A, B, C, and D. Varieties were suggested by Dr. Stith, University of Arizona, Tucson, Arizona, and randomized within each irrigation treatment. Three irrigations were given in addition to the leaching irrigation.

Treatments "A" and "B" seemed inferior in stand, vigor, size plants, and seed. The NK 3000 variety was poor seed. The 7-inch leaching ("A") was obviously a lower yielder and the 10-inch ("B") also showed poor potential. The Texas 650 seemed to be the best variety, and was later than others. Due to a mishap in harvesting samples, our Safford samples were accidently threshed and no yield results are available.

COMMENTS AND INTERPRETATIONS:

1. Barley yields were significant at the 5 percent level. The 8-inch leaching was significantly lower. The analysis of variance on weight of forty heads and seeds per head showed significance. This significance indicates that at least 12 inches of leaching water is necessary.

2. Good stands were obtained on all treatments. The 8-inch leaching treatment was much shorter than the other treatments, and appeared to have less tillering.

3. All leaching treatments showed reduced salts in the first- and second-foot levels. The 18- and 24-inch leaching treatments showed reduced salts in the third-foot level. The salts remained constant in the 12-inch leaching, but increased in the 8-inch leaching treatment. All soil profiles showed increases in salt after each irrigation. Soil profiles averaged increases of about 500 ppm during the growing season at all three depths.

4. Good stands were obtained with all sorghum varieties on all plots. The 8- and 12-inch leaching plots were less vigorous and appeared to be stunted in growth.

5. Though infiltration rates were slower than in the fall, leachings did reduce salts on sorghum plantings. The 10-inch leaching was not effective at any depth. Leaching information seemed more erratic under row-cropping than close-growing crops.

6. Salt added in irrigations subsequent to the leaching irrigation was less in 1960 than in 1959. This is probably due to better pump water by about 1000 ppm. (See Figures 1 and 2.)

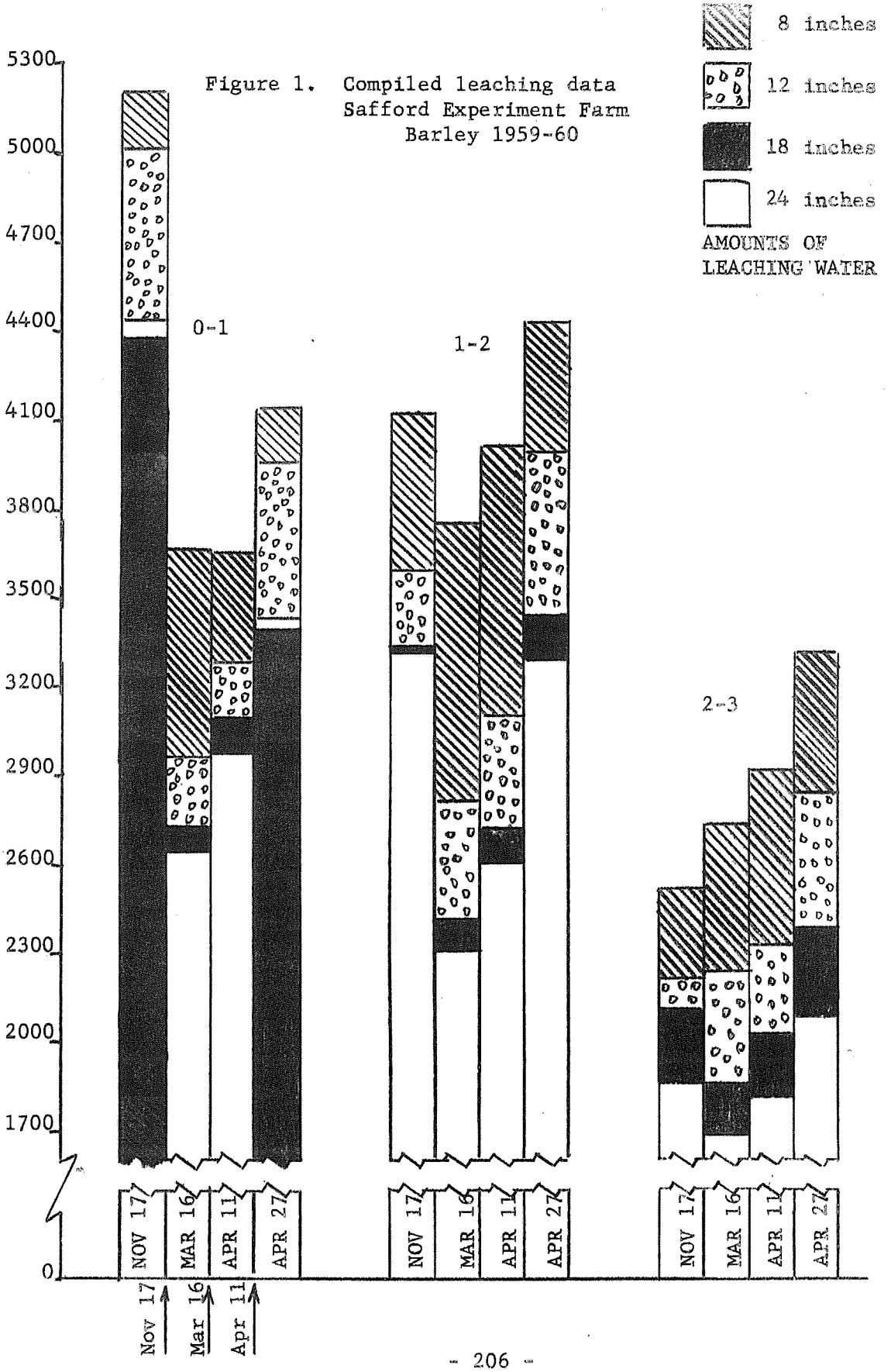

Figure 1. Compiled leaching data
Safford Experiment Farm
Barley 1959-60

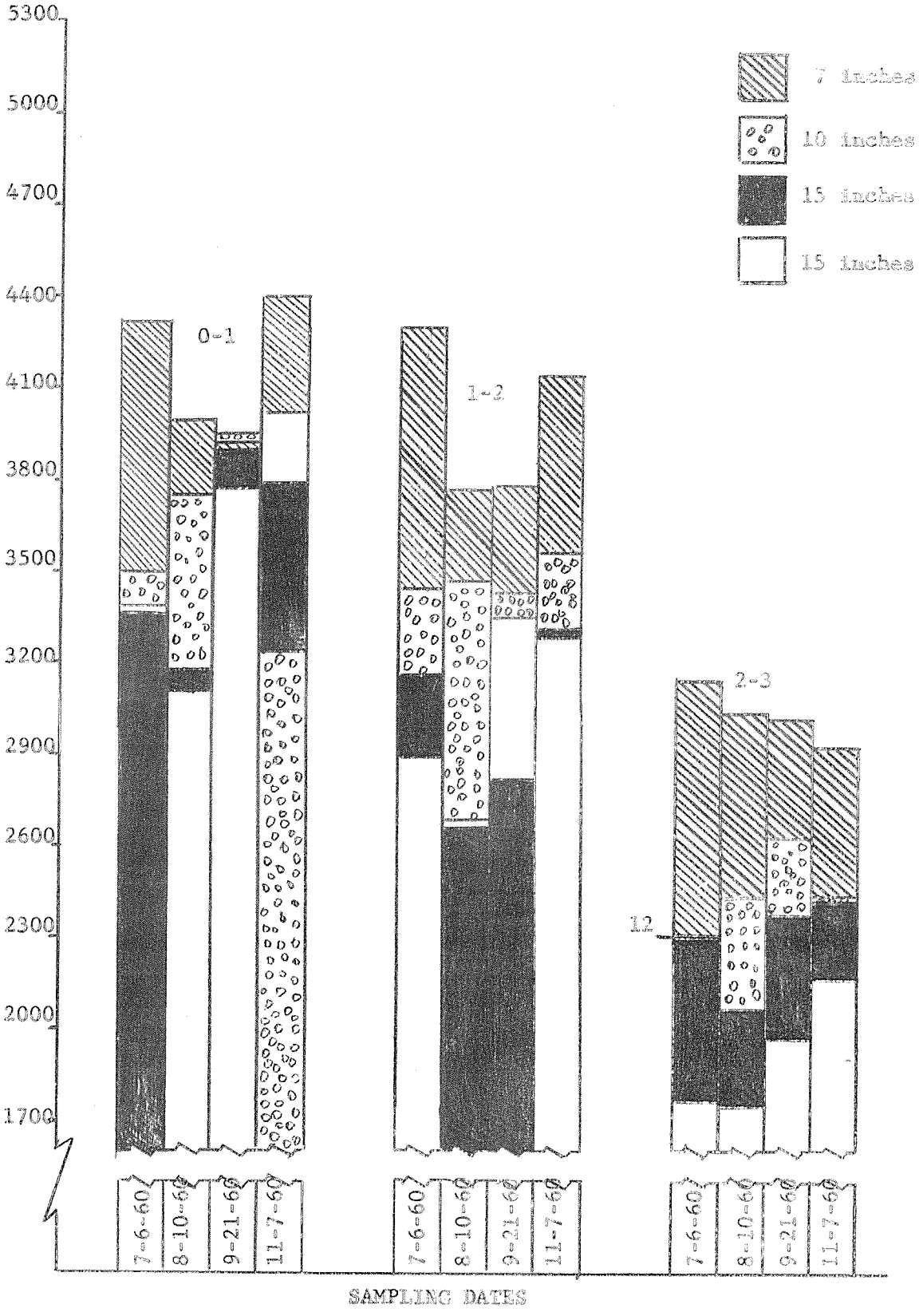

Figure 2. Compiled Leaching Data Safford Experiment Farm
Sorghum 1960

TITLE: SERVICE LABORATORY

PROGRESS:

The work performed by the Service Laboratory in 1960 included various physical and chemical analysis of 234 soil samples and 5 water samples. A breakdown of the analysis is given in Table 1.

Table 1.--Analysis performed by Service Laboratory 1960.

Analysis	Number of determinations
Particle size (hydrometer)	49
Moisture characteristic	
a. Pressure cooker	134
b. Pressure membrane	161
c. Pressure cells	10
pH and saturated conductivity	34
Calcium and magnesium	32
Sodium and potassium	32
Carbonate and bi-carbonate	32
Chloride and sulfate	5
Cation exchange capacity	14
Organic matter	6

In addition to the analysis listed in Table 1, a comparison was made with the pipette and hydrometer methods of particle-size determination. Although only one soil was used, excellent agreement was obtained. Since the hydrometer method is predominately used, this comparison served as a check on the personnel and equipment.

In establishing the chemical analysis procedures, the USDA Agricultural Handbook 60, which was organized by the Salinity Laboratory Staff, was used as a guide. Modifications in the methods were made when necessary to handle the extremely variable samples submitted for analysis. Newer analytic techniques are being tested whenever practicable to improve accuracy or to simplify the analytical procedures.

The following chemical and physical procedures have been checked and adopted for use by the Service Laboratory:

1. Anions in water and soil.
   a. Sulfate.
   b. Nitrate (incomplete).
   c. Chloride.
2. Cations in water and soil (water soluble and exchangeable).
   a. Calcium.
   b. Magnesium.
   c. Potassium.
   d. Sodium.
3. pH of soil and water.
4. Electrical conductivity of water and soil extracts.
5. Calcium carbonate equivalent of soil.
6. Organic matter in soil.
7. Cation exchange capacity of soil.
8. Surface area of soil (incomplete).
9. Hardness of water.
10. Carbonate and bicarbonate in water.
11. Total residue in water.

12. Density of soil solids.

13. Particle size (hydrometer).

14. Particle size (pipette).

15. Soil-moisture characteristics.

    a. Pressure membrane.

    b. Pressure cooker.

    c. Pressure cells.

PERSONNEL: A. J. Frasier, F. S. Nakayama, C. H. M. van Bavel, R. D. Jackson

SWC c10-1

Velocity induced pressure differentials caused by the presence of a seepage meter cup in a channel may cause appreciable error in the seepage measurements. These velocity induced pressure differentials have been found to cause the effective local head environment of the seepage meter cups to be lower than the head which would be indicated by the free water level. The free water surface must, therefore, be corrected for velocity induced pressure differences before it can serve as the reference level for seepage measurements. The magnitude of these corrections in relation to velocity and installation geometry were determined in a laboratory model study. The data are now being analyzed and prepared for publication.

Preliminary investigations of low-cost materials for reducing seepage losses have indicated that water repellent materials offer little promise for this purpose unless they are mechanically incorporated in the soil. Tests of the following materials have been promising: (1) a clay dispersant, (2) an asphalt emulsion which can be dispersed in water, and (3) a commercial material which can be dispersed in water and supposedly produces a hygroscopic action in the soil. The work to date indicates that low-cost materials may already be available which, when properly used, can reduce seepage losses from reservoirs and canals where extensive erosion does not occur.

A variable head technique for cup type seepage meters has been developed which permits determining the seepage rate, the hydraulic conductivity of the soil through which seepage is being determined, and the hydraulic gradients in the seepage area adjacent to the cup. It is considered that this falling head method, when used in conjunction with the Nevada seepage cup and corrections for velocity induced pressure differentials, will eliminate the major sources of errors which have caused other workers to obtain erratic and sometimes unreliable results with cup type seepage meters.

SWC c10-3

Preliminary tests of materials intended to increase precipitation runoff from soils have been promising. A spray application combining an asphalt emulsion and a water repellent material has stabilized the soil against erosion, produced essentially 100 percent runoff, and has shown good resistance to deterioration in limited exposure tests to date. This treatment costs about four cents per square yard for materials.

SWC c10-4

An inexpensive raft has been designed for the application of evaporation suppressing hexadecanol-octadecanol monofilms to stock ponds. Preliminary measurements indicate that a single, properly maintained raft will successfully apply a monofilm to a two-acre pond.

SWC c11-1

Investigations have shown that a standard 3-inch, short radius, flanged pipe elbow can be used as an accurate rate of flow meter by

correlating flow rate with the differential pressure between the inside and outside of the elbow. The meter was subjected to a wide variety of flow conditions and it was found that measurement errors did not exceed 2 percent if reasonable precautions were taken. The investigation is now being extended to elbows of larger diameter.

SWC c13-2

Good progress has been made in the development of better and smaller non-ventilated net radiometers. Shielded with polystyrene, the miniature radiometers show equal response to long and short waves which is not true of existing ventilated radiometers.

Design, construction, installation, and calibration of a set of three precision weighing lysimeters is now complete. The lysimeters, 1 m^2 in area and 1.61 meters deep, are located in a 100 m^2 test area. Weight is periodically monitored and recorded on punched tape with a sensitivity of about 20 grams in a total weight of about 3000 kg, or about .02 mm water.

A micrometeorological data handling system, capable of handling 45 channels at a rate of one per second, has been designed, constructed and installed. The information is stored on punched tape in digital form. Maximum accuracy is about 6 microvolts.

Several types of air humidity measuring equipment have been evaluated and good progress has been made on the development of a precision wet and dry bulb psychrometer assembly designed for use in an arid climate.

A mathematical description has been developed for the processes involved in the heat transfer method of measuring the flow of water in plant stems. This theoretical analysis agrees with actual measurements reported by other workers.

SWC c13-2

In annual reports for 1958 and 1959 it was stated the success of various years' irrigation schedules was at least partially due to irrigating when about 65% of the available water was used from the top three feet of the root zone. This was also true in 1960. In 1958 seven irrigations were required to satisfy this need; three, in 1959; five, in 1960. This study has served to tie down the actual need for water in terms of soil-moisture depletion. The difference in water requirements among years shows the need for a scientific approach on irrigation scheduling.

Blossom-and-boll-tagging studies show that fruiting peaks can be changed by irrigation water both in time and amount. Wetter treatments encourage larger bolls. Bolls increase in size up to September 1. Moisture-stressed treatments result in very pronounced fruiting periods.

Sorghum produced on 20-inch rows in 1960 required 3 irrigations for maximum production of 4750 pounds per acre. Additional irrigations did not increase yields. One less irrigation (2) lowered yields about 400 pounds per acre.

SWC c13-3

Consumptive-use measurements were made on 13 crops. The measurements were made on plantings handled according to procedures

recommended for maximum production. Unusually heavy rains occurred in October and the consumptive-use estimates for cabbage, broccoli, cauliflower, carrots, and onions can be expected to be about four inches too high.

Crop	C U	Peak use Inch/day	Peak use dates
Cotton	37.21	0.35	July 26
Wheat	18.22	0.29	April 20
Guar	24.55	0.30	August 3
Safflower	36.02	0.49	June 8
Sorghum	22.36	0.40	August 15
Blue Panicum	57.20	0.32	July 5
Bermuda	43.94	0.30	June 1
Cabbage	23.97	0.17	December 15
Broccoli	25.19	0.20	December 15
Cauliflower	20.74	0.19	December 15
Cantaloupe	21.72	0.33	June 20
Carrots	21.87	0.24	November 5
Onions	23.25	0.25	November 20

SWC c13-5

Studies on changes in pore space due to disks and tractor wheels showed significant differences between wheels and disks. No effect of disked over non-disked areas resulted on this particular soil which was Laveen clay loam. Wheels affected pore space to a depth of 10 inches.

A light-weight (3.5 kg) rate meter, completely transistorized and battery operated, has been developed and found entirely satisfactory for use with existing neutron probes.

Comparison of two neutron depth probes was made and accurate calibrations were conducted. A method for calibrating neutron probes with a solution of neutron absorbing material was tested and found of value within certain limits.

A particularly simple surface neutron probe has been evaluated and found accurate and useful. However, the method in general is subject to question when surface moisture is stratified.

A double tube method for measuring in situ hydraulic conductivity of soil above a water table was developed. The advantage of the method is its independency of the internal drainage characteristics of the soil, which eliminates the need for measuring hydraulic gradients in the soil or for using simplifying assumptions which are only applicable to special conditions.

The error in infiltration measurement with buffered cylinders due to different water levels in cylinder and buffer was shown to be directly proportional to the water level difference and inversely proportional to the infiltration gradient. The error was found to increase as the infiltration progresses and to reach a maximum at final infiltration conditions. For field installations commonly used, this maximum error can approach or even exceed the magnitude of the infiltration rates. Thus, it is important to

maintain equal levels in cylinder and buffer at all times during the infiltration measurement.

Design and evaluation has been completed of a small pressure cell for measuring the moisture characteristics of undisturbed soil cores with a precision of 2 mb and 0.003 gm moisture by volume. The small size of the pressure cell permits accurate determination of weight changes without removing the soil from the cell.

A procedure has been developed for the use of a miniature pressure cell in the relatively rapid and routine measurement of soil moisture diffusivity. Values of diffusivity obtained with this method are now being verified independently.

SWC c14-2

Leaching studies at Safford, Arizona, showed that soil-salt toxicity can be reduced with water containing nearly 3,000 ppm of salts. Salts were reduced in the soil enough to obtain stands of sorghum and barley. A very desirable yield of 82 bushels of barley per acre was obtained under this adverse salt situation. At least 12 inches of leaching water is necessary and there was some indication that more might be needed to maintain continued maximum production.

SWC c17-2

Preliminary tests of materials intended to increase precipitation runoff from soils have been promising. A spray application combining an asphalt emulsion and a water repellent material has stabilized soil against erosion, produced essentially complete runoff, and has shown good resistance to deterioration in limited exposure tests to date. This treatment costs about four cents per square yard for materials.

PAPERS PREPARED OR PUBLISHED DURING 1960

1. Biddulph, O., Nakayama, F. S., and Cory, R. The Transpiration Stream and the Ascension of Calcium. Plant Physiology.

2. Bouwer, H. Discussion of paper, "Laboratory Research on Interceptor Drains" by Keller, Jack, and Robinson, A. R. Journal Irrigation Drainage Division, Proc. Amer. Soc. Civil Engr., Vol. 86, No. IR2. 1960.

3. Bouwer, H. A Study of Final Infiltration Rates from Cylinder Infiltrometers and Irrigation Furrows with an Electrical Resistance Network. Proc. 7th Congress, International Society of Soil Science, 1960. (In Press).

4. Bouwer, H. A Variable Head Technique for Seepage Meters. Journal Irrigation and Drainage Division, Proc. Amer. Soc. Civil Engr. (In Press).

5. Bouwer, H. A Double Tube Method for Measuring Hydraulic Conductivity of Soil in Situ Above a Water Table. Proc. Soil Sci. Soc. Amer. (In Press).

6. Bouwer, H. Theoretical Effect of Unequal Water Levels on the Infiltration Rate Determined with Buffered Cylinder Infiltrometers. Agricultural Engineering. (In Press).

7. Blake, G. R., Allred, E. R., Van Bavel, C. H. M., and Whisler, F. D. Agricultural Drought and Moisture Excesses in Minnesota. Minnesota Agric. Exp. Sta. Tech. Bul. 235. 1960.

8. Ehrler, William. Some Effects of Salinity on Rice. Bot. Gaz. Dec. 1960.

9. Erie, Leonard J., et al. Alfalfa in Arizona. Alfalfa Production, Arizona Agric. Ext. Ser. Bul. (In Press).

10. Fritschen, Leo J., Construction and Calibration Details of the Thermal-Transducer Type Net Radiometer. Bul. of the Amer. Met. Soc. 41:180-183. 1960.

11. Fritschen, Leo J., and Shaw, R. H. The Effect of Plastic Mulch on the Micro-Climate and Plant Development. Iowa State Journal of Science 35:59-72. 1960.

12. Fritschen, Leo J., and Shaw, R. H. A Thermocouple-Type Anemometer and Its Use. Bul. of the Amer. Met. Soc. Vol. 42:42-46, No. 1. 1961.

13. Fritschen, Leo J., and Shaw, R. H. Transpiration and Evapotranspiration of Corn as Related to Meteorological Factors. (To be published in the March-April issue of Agron. Jour. 1961.)

14. Fritschen, Leo J., and Shaw, R. H. Evapotranspiration of Corn as Related to Pan Evaporation. (Submitted to the Agron. Jour.)

15. Harris, K., Erie, L. J., Peterson, B. Irrigating Cotton for Maximum Production. Proc. National Cotton Council, Phoenix, Arizona. March 1961.

16. Harris, K., and Erie, Leonard J. Minimum Tillage for Irrigated Soils in the Southwest. Division approval for publication as Farmer's Bul.

17. Myers, Lloyd E. Program and Facilities of the Southwest Water Conservation Laboratory. Proc. 16th Annual Meeting, Colorado Water Users Association. 1959.

18. Myers, Lloyd E. Facilities and Research Program of the Southwest Water Conservation Laboratory. Proc. 13th Annual Nevada Water Conference, Carson City, Nevada. (In Press).

19. Myers, Lloyd E., Jr. Conservation of Irrigation Water Supplies in Arid and Semi-Arid Climates. Arid Lands Symposium, Amer. Assoc. Adv. Science. University of Wyoming, Special Bul., Laramie, Wyoming.

20. Myers, Lloyd E. Chemicals for Reducing Infiltration and Seepage. Proc. 4th Annual Watershed Symposium, Phoenix, Arizona. (In Press).

21. Myers, Lloyd E. Chemicals for Agricultural Water Conservation. Proc. 14th Annual Nevada Water Conference, Carson City, Nevada. (In Press).

22. Myers, Lloyd E., Jr., and Haise, Howard R. Water Application Efficiency of Surface and Sprinkler Methods of Irrigation. Proc. International Congress Irrigation and Drainage, Madrid, Spain. (In Press).

23. Nakayama, F. S. Application of Tritium Tracer in Soil and Plant Water Investigations. U. S. Dept. of Agric., ARS 41-37. 1960.

24. Porter, L. K., Kemper, W. D., Jackson, R. D., and Stewart, B. A. Chloride Diffusion in Soils as Influenced by Moisture Content. Proc. Soil Sci. Soc. Amer. 24:460-463. 1960.

25. Reginato, R. J., and Van Bavel, C. H. M. Pressure Cell for Soil Cores. Proc. Soil Sci. Soc. Amer. (In Press).

26. Robinson, A. R., Muckel, D. C., Lauritzen, C. W., Erie, Leonard J., Ross, P. E. Distribution, Control and Measurement of Irrigation Water on the Farm. Division approval for publication as Farmer's Bul. (In Press).

27. Rubis, D. D., Dennis, R. E., Black, D. S., and French, O. F. Safflower in Arizona. Extension Service Bulletin, U. of A. (In Press).

28. Swift, L. W., Jr., and Van Bavel, C. H. M. Mountain Topography and Solar Energy Available for Evapotranspiration (Abstract). Amer. Geophys. Union Trans.

29. Van Bavel, C. H. M. Use of Climatic Data in Guiding Water Management of the Farm. Proc. Amer. Assoc. Adv. Sci. Pub. No. 62, Water and Agric., pp. 89-100. 1960.

30. Van Bavel, C. H. M. Soil Density Measurements with Gamma Radiation. Seventh Int. Cong. Soil Sci. Proc. (In Press).

31. Van Bavel, C. H. M. Lysimetric Measurements of Evapotranspiration Rates in the Eastern United States. Proc. Soil Sci. Soc. Amer. (In Press).

32. Van Bavel, C. H. M. Surface Neutron Probe for Soil Moisture. Proc. 14th Annual Nevada Water Conference, Carson City, Nevada. (In Press).

33. Van Bavel, C. H. M., and Harris, D. G. Evapotranspiration Rates from Bermuda Grass and Corn at Raleigh, North Carolina. Proc. Soil Sci. Soc. Amer.

34. Van Bavel, C. H. M., and Nielsen, D. R. Calibration and Design of Neutron Moisture Probes. Proc. Soil Sci. Soc. Amer. (In Press).