An Electronic Discriminator to Eliminate the Problem of Horizontal Raindrop Drift[1]

C. J. GANTZER, E. E. ALBERTS, AND W. H. BENNETT[2]

ABSTRACT

Raindrops falling through still air drift randomly causing difficulty in collecting uniform soil splash samples from single-drop detachment studies. We developed a simple electronic discriminator to eliminate this problem that can be used easily with any single drop rainfall tower. The main detector of the discriminator consists of two optical light source-sensors positioned at right angles in a horizontal plane. These sensors detect and select for use only those drops falling within a 6.4 mm square target window. Labor and materials for constructing the discriminator cost about $400. Two experiments were conducted to test the performance of the discriminator. One study analyzed drop masses collected both with and without use of the discriminator, and compared these quantities with drops collected directly from the drop former. No significant difference in mass between drops collected with the device and those collected directly from the drop former was found. A significant ($P<0.01$) decrease in drop mass was found without use of the device. The discriminator also decreased drop mass variance about six times. The second experiment measured soil splash from uniformly packed cores of Norbourne fine-sandy loam (Typic Argiudolls) packed at an average bulk density of 1.35 Mg m^{-3} and equilibrated to -2 kPa soil water potential. Results show an average splash increase of about 46% (4.2 mg) with use of this device versus without it. Soil splash variance was also reduced by 19%, further confirming that use of the discriminator significantly reduces alterations in drop characteristics, thus insuring against biasing of raindrop kinetic energy versus soil splash relationships.

Additional Index Words: **soil splash detachment, photoelectric waterdrop detector, rainfall erosion, rainfall simulation.**

Gantzer, C. J., E. E. Alberts, and W. H. Bennett. 1985. An electronic discriminator to eliminate the problem of horizontal raindrop drift. Soil Sci. Soc. Am. J. 49:211–215.

THE HORIZONTAL DRIFT of single waterdrops during freefall has presented problems in studying the mechanism of soil splash detachment. Due to deposition of splash near the point of impact, the possibility for collecting all splash from single drops decreases as the target area increases. Although it is desirable to use small target areas, horizontal drift has made it necessary to use large samples. Mutchler (6)

[1] Contribution from the Missouri Experiment Station Journal Series no. 9493. Univ. of Missouri, Columbia, MO 65211. This work was supported by Missouri Agric. Exp. Station Project 396, and University of Missouri/ARS Cooperative Agreement no. 58-519B-3-1235. Received 9 Mar. 1984. Approved 10 Aug. 1984.

[2] Assistant Professor of Agronomy, Univ. of Missouri, Columbia, MO 65211, Soil Scientist, USDA-ARS Watershed Research Unit, Columbia, MO 65203 and Electronics Technician, Office of Research, Univ. of Missouri, Columbia, MO 65211.

measured the horizontal drifting of waterdrops falling through 9.75 m of freefall. Frequency distribution of the radial distance from target epicenter was found to be normally distributed, with the 99% confidence interval for individual drop impact having a radius of 270 ± 10.4 mm for drops 3.5 mm in diameter and a radius of 340 ± 13.2 mm for drops 5.6 mm in diameter.

Al-Durrah and Bradford (1) described a raindrop tower having a two-stage baffle system which significantly improved control of horizontal drifting. We constructed a similar baffle system. Experimentation on raindrop mass with such a device, however, showed that it caused a significant increase in variance relative to drops collected directly from the drop former. The cause of this variance increase was determined to be drop impact on the sharp-edged cones of the baffles, indicating that additional refinement could reduce splash measurement error due to nonuniform drop size. This article describes a simple electronic apparatus designed to eliminate the problem of horizontal waterdrop drift that can be adapted for use with any drop former tower.

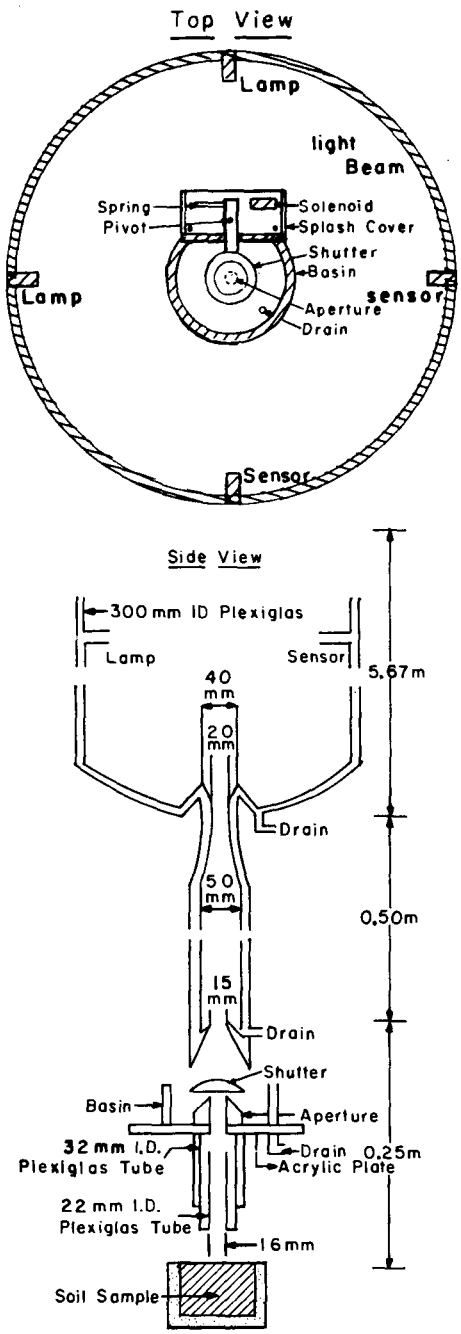

Fig. 1.—Schematic diagram of two-stage baffle, light source-sensors, and electromechanical shutter.

MATERIALS AND METHODS

Drop Former

Simulated rainfall was created by a drop former made of four telescoping tubes each 25 mm long and overlapping the next smaller by about 20 mm as suggested by R. W. Palmer (5). The drop former was attached to a constant head reservoir of distilled water, maintained at a temperature of 20 degree C. The drop former was positioned 6.42 m above the sample target area. A tubular aluminum hose with a diameter of 0.3 m was suspended from the drop former to within 0.5 m of the upper portion of a two-stage baffle similar to that used by Al-Durrah and Bradford (1). We used the two-stage baffle only as a support for light sources and sensors and as protection from wind turbulence. Substitution of other less costly materials for the baffle would have worked equally well. For an average drop mass of 56.3 mg and assuming a spherical drop, the average drop diameter was 4.76 mm. Using data for falling waterdrops from Laws (4), the average velocity and kinetic energy of the waterdrops at impact were 3.4 m sec^{-1} (92% of terminal velocity) and 325 μ J $drop^{-1}$, respectively.

Drop Discriminator

The drop discriminator consists of two light source-sensors, positioned horizontally and at right angles, an electronic controller, and an electromechanical shutter (Fig. 1). The source-sensors, and the electromechanical shutter are fitted to the two-stage baffle system described by Al-Durrah and Bradford (1). The device shutter is normally closed to all drops but those falling through a 6.4 mm square target window. Drops falling through this window pass through both light beams coincidentally, causing the controller to open the shutter allowing drops to pass to the soil target.

Discriminator source-sensors are held in aluminum block housings. Light sources are incandescent "grain of wheat" bulbs powered by regulated DC current to reduce 60 Hz modulation. Sources are monitored by phototransistors, which produce output if light beams are interrupted by a drop. Housings are bored through, and effectively collimate light beams to a diameter of 6.4 mm. The intersection of both light beams forms a target window 6.4 mm square, thus drops within this window are no more than 3.2 mm from the center of the target window. The target window is centered over the aperture axis of the first stage of the baffle device. A drop passing through an axis of the target window interrupts one light beam, which is detected by the photosensor, and produces an increase in pulse signal with time (a schematic of the electronics can be found in Fig. 2). This pulse is amplified and raised to a logic level which at a threshold output value routes to a "Schmidt trigger" input of one shot multivibrator. The one-shot output pulse has a width set by an external control, and is thus independent of the triggering pulse width. A drop which has broken both beams produces two one-shot outputs. Drops falling perfectly on axis produce maximum output with no relative time delay. Drops falling slightly off-axis will produce a lower output value, which is delayed in time causing the threshold value to be reached later than perfectly aligned drops. The

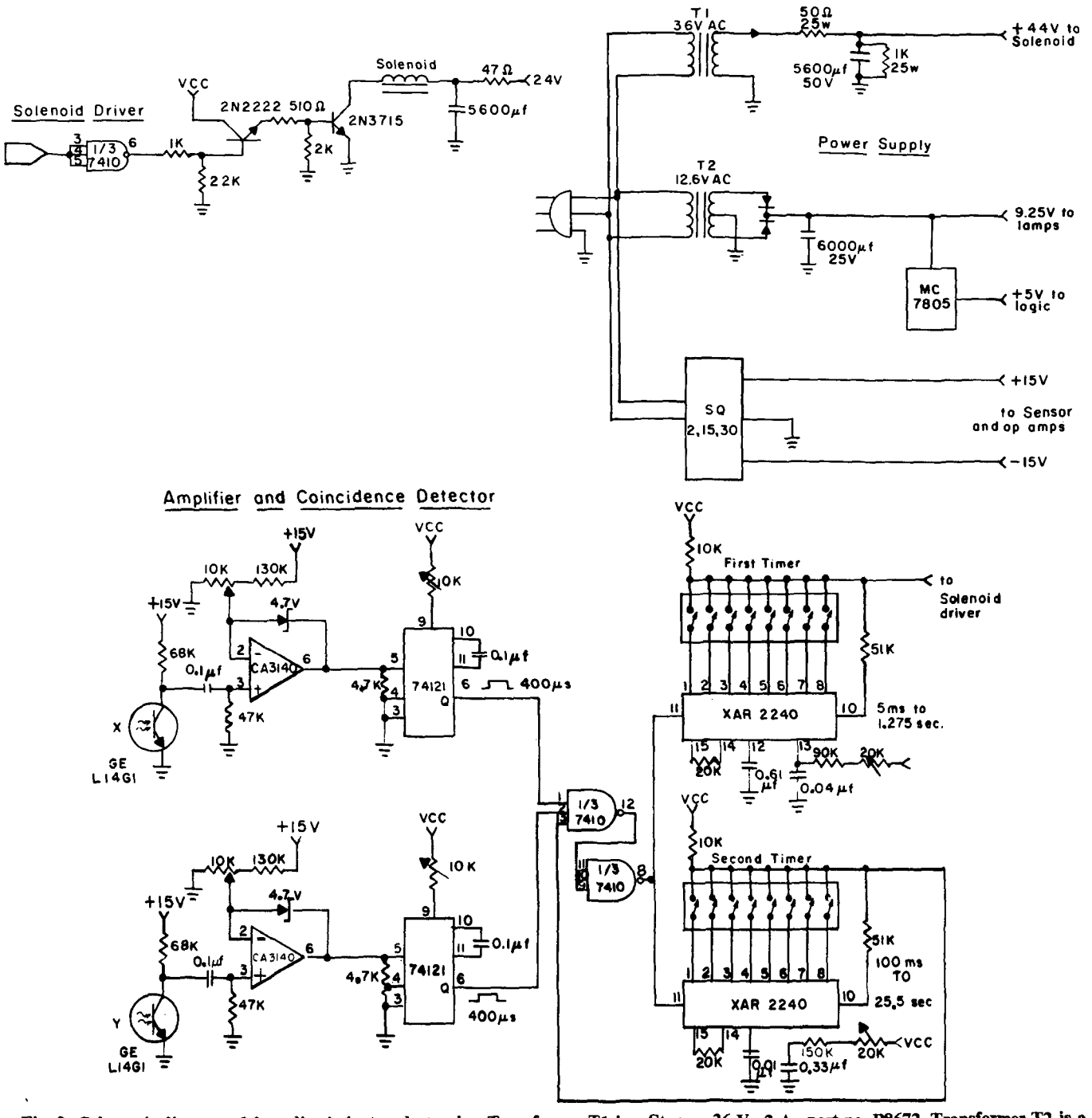

Fig. 2—Schematic diagram of drop discriminator electronics. Transformer T1 is a Stancor 36 V., 2 A., part no. P8672. Transformer T2 is a Stancor 12.6 V. 1 A., part no. P8384. Solenoid is a Potter and Brumfield HD interim duty 24 V DC, part no. 54-25-D-24.

selection of a drop is thus based on whether output values from both source-sensors are in unison or very close to it.

A 7410 nand gate measures the coincidence between these pulses and produces an output if pulses occur within a preselected time-window. Adjustment of the time-window to smaller values will cause a greater selectivity in drop selection. A small time-window will cause only the most precisely positioned drops to be selected. A larger time-window will accept drops of slightly less perfect alignment. Output from the 7410 is inverted, and directed to two Exar 2240 programmable timers. The outputs from these timers are also set externally, and so are independent of triggering pulse width. The first timer (Fig. 2) produces a signal which enables the shutter solenoid to open the shutter, hold it until the drop passes, and then close it. The second timer disables the 7410 for a selected period, preventing further drops from striking the samples.

Although the above discussion is for an apparatus tuned for 4.76 mm diameter drops, adjustment of the units for other drop sizes can be performed by reducing the source-sensor housing aperture. This can be accomplished by fitting precision machined masks directly over the exact center of each housing. This procedure will insure that smaller drops will sufficiently occlude the source-sensor beam pathways, thus producing large enough pulse signals to the 7410 nand gate for triggering of the one-shot multivibrators.

The shutter mechanism was designed for extremely fast action in order to open between the time the drop was detected and just before it reached the shutter. We designed the system to open in about 18 ms, by using a heavy-duty solenoid. The shutter was constructed so that the solenoid would operate within a distance of about 13 mm or two-thirds of its rating. The level pivot was placed for speed rather than power. To allow this, shutter mass was kept very low by using thin aluminum and celluloid materials for construction. To reduce mass even further, the pole piece was drilled out, thus reducing its mass by about half. To further insure adequate speed, the power supply to the selenoid was increased to 44 V rather than the rated 24 V. As the operation is highly intermittent, the increased voltage should not cause premature failure of the unit.

Using the above information, construction of a similar drop discriminator should be relatively easy. Construction time for an electronics technician is estimated at 22 h. The 1984 cost for all electronic components is about $180. Including a small amount of machining, the approximate total cost of the apparatus is $420, thus making the unit quite economical.

Equipment Performance

Two experiments were conducted to test the performance of this equipment. The first study analyzed drop mass for three treatments. One treatment (WITH) evaluated waterdrops after passing through the two-stage baffle with the electronic drop discriminator activated. The second treatment (WITHOUT), evaluated drops after passing through the two-stage baffle with the discriminator deactivated and the shutter open. The third treatment (CHECK) collected drops directly after exit from the drop former. All drops were collected in a 50 ml plastic beaker lined with tissue to insure total drop collection. Weights were recorded to the nearest 0.1 mg. The experiment was a completely randomized block design with days representing blocks. Five soil splash samples were collected from each treatment on four different days. Analysis of variance was performed on the data. The model was unbalanced because two of the observations were lost from the WITH treatment in the second block. In one instance a partial drop was collected because the shutter did not open completely. This drop failed to meet a final test criterion for a satisfactory drop which consisted of maintaining a dry shutter aperture after the drop had fallen. This criteria was met by all other WITH drops. In another instance, two drops passed through the shutter before it closed. The block by treatment interaction with six degrees of freedom was used for the experimental error term.

A second study, the soil splash experiment, was conducted to determine if differences in soil splash could be detected between the WITH and WITHOUT treatments using a paired t-test. Splash was collected using the splash collector and methods described by Al-Durrah and Bradford (1). In addition, soil shear strength was determined using the fall-cone apparatus (3). A total of 49 samples were measured. The soil material was collected from the B31 and B32 horizons of Norbourne series (Typic Arguidoll). Soil texture from these horizons ranged from fine-sandy loam to loamy fine sand. Organic matter was less that 1%. Soil was sieved through a 2 mm sieve and air-dried. Sufficient air-dry soil was placed into an assembly of three 30 × 54 mm I.D. brass cylinders, to achieve a central core which would remain intact after packing. Cores were hydraulically pressed into the assembly using special pistons which fit into the ends of the upper and lower cylinder. The pistons were designed with ridges which served as pressing stops. After packing, the upper and lower cylinders were removed, leaving the prepared soil all within the center cylinder. Bulk densities of prepared samples ranged from 1.3 to 1.4 Mg m^{-3}. Samples were wet over night and equilibrated to − 2 kPa soil water potential on a sand-bed tension table for testing. Samples were mapped into halves and treatments were randomly assigned. Soil splash and shear strength were then determined twice on each half. Differences between values on each half were used for paired-analysis. Prior to the paired-analysis, data were tested for normality. Both splash and shear strength data were found to be significantly non-normal. A common Log transformation of the data was found to be effective in reducing this condition, thus geometric rather than arithmetic means are presented.

Table 1. Performance of the electronic discriminator with the two-stage baffle vs. two-stage baffle alone.

Treatment	Mean drop mass ± SE	Geometric mean soil splash ± SE	Geometric mean strength ± SE
	mg/drop		k Pa
With electronic discriminator	55.6 ± 3.3	13.3 ± 1.7	6.38 ±1.23
Without electronic discriminator	44.8 ±19.4	9.1 ± 2.1	6.16 ±1.23
Check	54.7 ± 4.2	–	–
Mean *d*	–	4.2	0.22
t (48 df)	–	4.86	1.99
P	–	<0.001	0.057

RESULTS AND DISCUSSION

Results of the drop mass experiment indicate a significant decrease in drop mass for the WITHOUT treatment versus the CHECK (Table 1). The probability of a deviation greater than the absolute value of the standard normal variate for a true null hypothesis was ($P < 0.005$) for this treatment comparison. No significant difference was found between the WITH and CHECK treatments ($P < 0.25$). The discriminator reduced the standard error of the observations about six times (Table 1). This reduction occurred because of the elimination of partial drops from the target area, which were fragmented due to physical impact with the baffle construction. Although design of the baffle included two "sharp-edged" cones to exclude drops outside the 15 mm diameter target window, it appears that this objective was only partially achieved.

The soil splash experiment analyzed using a paired *t*-test also confirmed the results of the drop mass study. Analysis of shear strength data showed nonsignificantly greater values ($P = 0.057$) for core halves allocated to the WITH treatment. Because recent research has shown a high inverse correlation between shear strength and splash (1,2), splash for the WITH measurements probably would have been less than for the WITHOUT measurement, if there were no improvement using the discriminator. However, analysis of the splash data clearly indicates a significant increase in splash ($P < 0.001$) for the WITH treatment. A 19% decrease in splash variance was also found with the discriminator. Both studies clearly indicate that the discriminator significantly improves waterdrop characteristics.

Data presented show that a simple, inexpensive electronic discriminator is capable of selecting drops similar in size and variance to those collected directly from drop formers. The discriminator can be easily mounted to a simple frame and used with any single drop rainfall simulator. The potential benefits of this

device include protection against rouge (partial) drops which increase splash variance and a reduction in the number of determinations needed to show significant treatment differences. The unit also insures against significant biasing of raindrop kinetic energy versus soil splash relationships.

REFERENCES

1. Al-Durrah, M., and J.M. Bradford. 1981. New methods of studying soil detachment due to waterdrop impact. Soil Sci. Soc. Am. J. 45:949–953.
2. Cruse, R.M., and W.E. Larson. 1977. Effect of soil shear strength on soil detachment due to raindrop impact. Soil Sci. Soc. Am. J. 41:777–781.
3. Hansbo, S. 1957. A new approach to the determination of the shear strength of clay by the fall-cone test. R. Swed. Geotech. Inst. Proc. no. 14, Stockholm.
4. Laws, J.O. 1941. Measurements of the fall velocity of waterdrops and raindrops. Trans. Am. Geophys. Union 22:709–721.
5. Mutchler, C.K., and W.C. Moldenhauer. 1963. Applicator for laboratory rainfall simulator. Trans. Am. Soc. Agric. Eng. 6:220–222.
6. Mutchler, Calvin K. 1965. Using the drift of waterdrops during fall for rainfall simulator design. J. Geophys. Res. 70:3899–3902.

ERRATA

An Electronic Discriminator to Eliminate the Problem of Horizontal Raindrop Drift

C. J. GANTZER, E. E. ALBERTS, AND W. H. BENNETT

Soil Sci. Soc. Am. J. 49:211–215 (Jan.–Feb. 1985 issue)

In the Materials and Methods section on page 212, the average velocity and kinetic energy of waterdrops should be 8.4 m s^{-1} and 1.98 mJ, respectively.