PFEIFFER, W., RIEGELBAUER, G., MEIER, G., SCHEIBLER, B., 1985. Effect of hypoxanthine-3 (N)-oxide and hypoxanthine-1 (N)-oxide on central nervous excitation of the black tetra Gymnocorymbus ternetzi (Characidae, Ostariophysi, Pisces) indicated by dorsal light response. J. Chem. Ecol., 11, 4, 507-523.

SAGLIO, PH., 1982. Piégeage d'anguilles (Anguilla anguilla L.) dans le milieu naturel au moyen d'extraits biologiques d'origine intraspécifique. Mise en évidence de l'attractivité phéromonale du mucus épidermique. Acta Oecol. (Oecol. Appl.), 3, 223-231.

SAGLIO, PH., BLANC, J.M., 1983. Etude en olfactomètre de la réponse comportementale aux L. acides aminés chez le juvénile de carpe, Cyprinus carpio L. Biol. Behav., 8, 359-370.

SAGLIO, PH., FAUCONNEAU, B., 1985. Free amino acid content in the skin mucus of goldfish, Carassius auratus L. : influence of feeding. Comp. Biochem. Physiol., 82 A, 67-70.

SAGLIO, PH., LE MARTRET, M.A., 1982. Communication intraspécifique d'origine phéromonale chez le Carassin doré immature (Carassius auratus L.). II. Etude en olfactomètre de l'activité comportementale d'extraits d'origine épidermique. Biol. Behav., 3, 221-234.

SCHUTZ, F., 1956. Vergleichende Untersuchungen über die Schreckreaktion bei Fischen und deren Verbreitung. Z. Vergl. Physiol., 38, 84-135.

SOKAL,R.R., ROHLF, F.J., 1969. Biometry. The principles of practice of statistics in biological research. W.H. Freeman and Company, San Francisco, 776 p.

STABELL, O.B., SELSET, R., 1980. Comparison of mucus collecting methods in fish olfaction. Acta Physiol. Scand., 108, 91-96.

SUZUKI, N., 1973. Olfactory conditioning of fish by amino acids. Zool. Mag., 82, 285-290.

TODD, J.T., ATEMA, J., BARDACH, J.E., 1967. Chemical communication in social behavior of a fish, the yellow bullhead (Ictalurus natalis). Science, 158, 672-673.

TUCKER, D., SUZUKI, N., 1972. Olfactory responses to schreckstoff of catfish. In : Olfaction and taste. IV, D. SCHNEIDER (Ed.), Wissenchaftliche, Stuttgart, 4, 121-127.

VON FRISCH, K., 1938. Zür psychologie des Fisch-schwarmes. Naturwissenschaften, 26, 601-606.

WREDE, W., 1932. Versuche über den Artduft der Elritzen. Z. Vergl. Physiol., 17, 510-519.

Biology of Behaviour, 1989, *14*, 148-156

Individual discrimination in juveniles of two turtles, *Pseudemys nelsoni* and *Pseudemys floridana* (Chelonia, Emydidae)

M. KRAMER

Department of Zoology, University of Tennessee, Knoxville, Tennessee 37996-0810, USA.

Soumis le : 28 mai 1988. *Accepté le :* 18 janvier 1989.

SUMMARY

Individual discrimination in juveniles of two turtles, *Pseudemys nelsoni* and *Pseudemys floridana* (Emydidae).

Individual discrimination abilities were examined, using a T- maze, in two species of turtles, *Pseudemys nelsoni*, the Florida red- bellied turtle (N = 5), and *P. floridana*, the penninsula cooter (N = 2). In the first experiment, the subjects, 2 *P. nelsoni* and 1 *P. floridana*, were positively reinforced with food upon exiting the correct side. One of the *P. nelsoni* and the *P. floridana* were trained prior to testing. Two *P. floridana* served as matched stimuli. Only the *P. floridana* did significantly better than chance ($p < 0.05$). In the second experiment, a new group of turtles, 3 *P. nelsoni* and 1 *P. floridana*, was used and incorrect choices punished. Two *P. nelsoni* served as matched stimuli. The *P. floridana* performed better than the 3 *P. nelsoni*. Although these subjects learned to discriminate between the two *P. nelsoni* during the testing period, their performance was inferior to that of the *P. floridana* in the first experiment.

Key-words: individual discrimination, individual recognition, *Pseudemys nelsoni*, *Pseudemys floridana*, turtle, Chelonia, learning.

RESUME

Discrimination individuelle chez des tortues juveniles, *Pseudemys nelsoni* et *Pseudemys floridana* (Emydidae).

La capacité de discrimination individuelle a été testée chez des tortues juveniles *Pseudemys nelsoni* (N = 5) et *P. floridana* (N = 2) à l'aide d'un labyrinthe en T. Les sujets de la 1ière expérience, 2 *P. nelsoni* et 1 *P. floridana* ont été récompensés par de la nourriture pour avoir opéré le bon choix à la sortie du labyrinthe. L'une des 2 *P. nelsoni* et *P. floridana* ont été entrainées avant d'être testées. Deux *P. floridana*, de taille et de patron de coloration similaires, ont été utilisées comme stimuli. Un seul sujet, *P. floridana*, a appris à distinguer significativement et non-aléatoirement ($p < 0,05$) entre les 2 *P. floridana*. Lors de la 2ième expérience un nouveau groupe, 3 *P. nelsoni* et 1 *P. floridana*, a été testé. Deux *P. nelsoni* similaires ont été utilisées comme stimuli. Dans cette expérience les sujets qui ont opéré le mauvais choix à la sortie du labyrinthe ont été punis. Les résultats de *P. floridana* ont surpassé ceux des trois *P. nelsoni*. Bien que ces sujets ont appris à distinguer entre les deux *P. nelsoni*, leurs progrès ont été inferieurs à ceux de *P. floridana* de la 1ière expérience.

Mots-clés: discrimination individuelle, reconnaissance individuelle, *Pseudemys nelsoni*, *Pseudemys floridana*, tortue, Chelonia, apprentissage.

Reprint requests: MATTHEW KRAMER, address given above.

INTRODUCTION

Individual recognition has been experimentally demonstrated in some mammals, birds, fish, invertebrates (reviewed in COLGAN, 1983; JOHNSON, 1977), and the lizard, *Dipsosaurus dorsalis* (GLINSKI and KREKORIAN, 1985). Other lizard studies suggest individual discrimination abilities, although this was not always the study's objective (e.g., ANDREWS, 1985; CREWS, 1975; DUGAN, 1982; FERGUSON, 1971; MCDONALD, 1987). Perhaps the first to discuss the importance of researching individual and species discrimination in turtles was CASTEEL (1911), although he used more standard tests of visual acuity and form discrimination (see BURGHARDT, 1977, for other examples). EVANS et al. (1973, 1974) demonstrated that juvenile *Trachemys scripta* could be "imprinted" on each other, suggesting individual discrimination abilities.

A social system based on dominance hierarchies is often taken as evidence that the species possesses individual recognition capabilities, although dominance hierarchies may also be based on single characters, e.g., size (MCBRIDE, 1964; COLGAN, 1983). Field observations suggesting dominance hierarchies in chrysemid (*sensu* MCDOWELL, 1964) turtles have been reported in many basking studies (AUTH, 1975; LOVICH, 1984; BURY et al., 1979) and from observations of animals in the water (LARDIE, 1983; KRAMER, 1986). HARLESS (1979) speculates that most species of turtles form dominance hierarchies in nature. Dominance hierarchies in captive chrysemid turtles were documented by EVANS (1940, 1952) and LARDIE (1983). KRAMER (1986) speculates that male-female aggressive behavior in *Pseudemys nelsoni* also suggests individual recognition since females could use information from these agonistic interactions to later select mates, perhaps using male vigor as an indicator of genetic merit. Most individuals in KRAMER's (1986) study were fairly sedentary and thus would be expected to encounter the same individuals repeatedly.

In the experiments described below I tested for the ability of individual *Pseudemys nelsoni* and *P. floridana* to distinguish between two turtles, both either conspecific or heterospecific with the subject. Both species were used because interspecific interactions involving *P. nelsoni* and *P. floridana* were occasionally seen during underwater observations at Rock Springs run, Apopka, Florida, USA (KRAMER, unpubl. data).

EXPERIMENT 1

Introduction

The many studies of discrimination and learning abilities of turtles, reviewed by BURGHARDT (1977), indicated that juvenile emydid turtles would perform well in a choice situation if rewarded with food. The objective of this experiment was to determine if juvenile turtles could learn, using posivitive reinforecement and a T-maze, to discriminate between two juvenile conspecifics or congeners. T-mazes were used in several studies involving turtle learning abilities (reviewed in

BOYCOTT and GUILLERY, 1962; BURGHARDT, 1977; HEIDT and BURBIDGE, 1966; SPIGEL, 1963). To verify that animals were responding appropriately based on an ability to recognize individuals, it is necessary to rule out obvious differences, such as a large size differential. In this and the following experiment, the turtles serving as positive and negative stimuli were chosen from the pool of available animals based on their close physical resemblance.

Materials and Methods

One *Pseudemys floridana* and two *P. nelsoni* juveniles were tested for their ability to discriminate between two *P. floridana* juveniles (plastron lengths of 103 and 110 m; weights of 250 and 269 g, respectively). The latter two turtles closely resembled each other in size, coloration and patterning of the head, appendages and shell. All animals were captured in Rock Springs run, Apopka, Florida, USA, in August 1985 and released in June 1986. Juveniles were used because of the difficulty of maintaining and testing large adults in the laboratory.

The animals were maintained and tested in their home enclosure, a round, plastic wading pool, 137 cm in diameter, filled to a depth of 23 cm. Several cinder blocks provided hiding places and supported a wooden basking platform. The room was illuminated with standard fluorescent lamps on a 12L:12D cycle. Part of the basking platform was warmed for 8 h/day with a 275 W Sun lamp

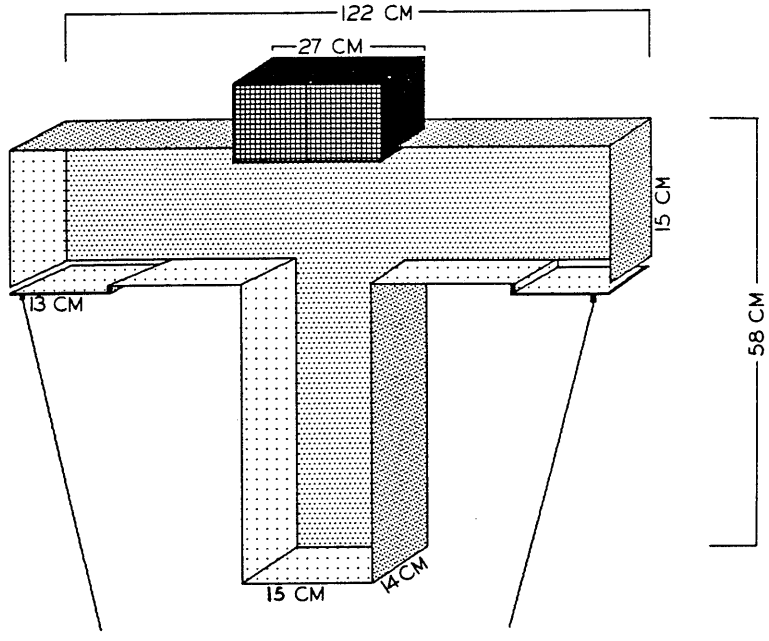

FIGURE 1. The T-maze, used in Experiments 1 and 2 (not to scale), floated but was about two-thirds full of water during training and testing. Subjects (*Pseudemys nelsoni* and *P. floridana*) were placed at the bottom of the "T".

FIGURE 1. Labyrinthe en T, utilisé pour les expériences 1 et 2 (dimensions non-proportionelles), flottait et était rempli aux deux tiers d'eau pendant les periodes d'apprentissage et d'essai. Les sujets (*Pseudemys nelsoni* and *P. floridana*) étaient déposés au fond du labyrinthe en T.

suspended 30 cm above it. Mean room temperature was 28.5°C ± 1.4°C (S.D.). The animals were fed to satiation with frozen or live crickets, cat food, and lettuce after training or testing, three times/week. A Plaster-of-Paris block, from which they would break off and ingest small pieces, provided calcium. Water was filtered through a piece of foam cut to fit around a small submersible pump.

A T-maze, used for training and testing the turtles in these experiments, was constructed from plywood and painted with white marine epoxy (Fig. 1). The ends of the T were fitted with hinged doors that could be opened by pulling on a string. The doors served two functions; they prevented water from flowing through the maze, which might bias an animal's choice, and they prevented other animals from entering the maze. At the choice point, the maze was cut to accept two wire baskets holding the stimuli. The mesh was large enough to permit the subjects to insert their heads into the baskets to nose the stimuli. Turtles used as stimuli were free to turn within the baskets, thus the subjects were usually not presented with two turtles facing the same direction.

Training

For three months prior to testing, the *Pseudemys floridana* (subject 1) and one *P. nelsoni* (subject 2) were trained to orient (turn) toward various cues placed in the wire baskets (Table 1). At first, two colored squares (each 103 cm^2) served as stimuli. Successively closer approximations to the test conditions were used in subsequent blocks. A block of trials lasted about one h with three or

TABLE 1. Stimuli and results of training sessions, in order, for one *Pseudemys floridana* (subject 1) and one *P. nelsoni* (subject 2).

TABLEAU 1. Choix de stimuli et résultats des essais d'apprentissage dans l'ordre qu'ils ont été accomplis pour une *Pseudemys floridana* (sujet 1) et une *P. nelsoni* (sujet 2).

Stimulus		No. Blocks	No. Trials		% Correct		p (Binomial test)	
Positive	Negative		Subject 1	Subject 2	Subject 1	Subject 2	Subject 1	Subject 2
green square	red square	4	42	48	85.7	68.8	<0.01	<0.01
green square + juv. *P. nelsoni*	red square	4	42	43	71.4	58.1	<0.01	0.18
juv. *P. nelsoni*	red square	2	23	17	43.5	52.9	0.80	0.50
juv. *P. nelsoni*	empty	3	28	27	57.0	44.4	0.29	0.78
juv. *P. nelsoni*	juv. *P. floridana*	130	209	210	66.5	56.7	<0.01†	0.03†

†normal approximation to the binomial

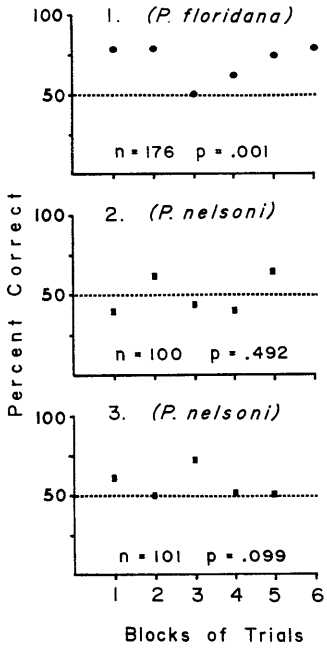

FIGURE 2. Percent correct of each block of trials for subjects (*Pseudemys floridana* and *P. nelsoni*) in Experiment 1.

FIGURE 2. Pourcentage de choix corrects dans chaque tranche d'essais pour les sujets (*Pseudemys floridana* et *P. nelsoni*) de l'expérience 1.

four blocks conducted in a week; the number of trials in a block depending on how quickly the subjects ran the maze. Baskets containing the stimuli were switched randomly, determined with a coin toss, between the two positions to eliminate turning bias, with the constraint that the stimuli were not in the same position on more than three successive trials (TRILLMICH, 1976). During a block of trials the stimuli were not presented in the same basket for more than three successive blocks.

Trials were conducted after 1600 h to ensure that animals had ample opportunity to bask. A block of trials commenced when I turned off the heat lamp, placed the maze in the water, where it floated, and the stimuli in the baskets. The baskets were clipped together and placed into the opening at the choice point. Each trial began when I placed the subject in the maze at the starting point, waited until it passed one of the two cages, and then opened both doors. If the subject made the correct choice, it was rewarded with one or two crickets, which were always eaten. If not, it was returned to the starting point and had to rerun the maze until the correct choice was made. After about three weeks of training, the animals would often swim near the starting point of the maze, as if waiting to be put back in. The relatively low percentage of correct responses in Table 1 suggests that these animals had difficulty learning this paradigm (see SHETTLEWORTH, 1984).

Testing

For the duration of the testing period, two juvenile *Pseudemys floridana*, matched for size and pattern, were used as the stimuli to discriminate. If the subject turned down the arm of the maze containing the "+" individual, a correct choice was scored. The test procedure differed from the training procedure because the animals were allowed to leave the maze whether or not they turned in the correct direction, but were only rewarded if the correct choice had been made. Additionally, a second untrained *P. nelsoni* (subject 3) was included during testing since it accepted food immediately after beinb placed in the maze.

The significance of the percent correct for all trials was tested using the normal approximation to the binomial (one-tailed, HINES and MONTGOMERY, 1980).

Results

In this series of tests, one of the turtles performed significantly better than chance and two did not (Fig. 2). The subject that performed the best was the juvenile *Pseudemys floridana* (67.6%), as might be expected because it was discriminating between two conspecifics. Neither the untrained *P. nelsoni* (subject 3, 56.4%) nor the trained *P. nelsoni* (subject 2, 51.0%) performed well. Subject 2 also performed less well than the *P. floridana* juvenile during training sessions (Table 1).

EXPERIMENT 2

Introduction

Since results from the first experiment demonstrated that at least one individual could discriminate between two similar conspecifics when positively reinforced, a second experiment was initiated. The objective was to replicate the positive findings of the first experiment using additional subjects and a modified methodology. It was hoped that the lengthy training period using stimuli other than turtles could be eliminated by punishing incorrect choices. The learning literature suggests that the most efficient way to suppress a response is to punish it if a nonpunished alternative is available (FANTINO, 1973). The subjects were not rewarded, allowing more trials to be administered in the same amount of time.

Materials and Methods

Subjects consisted of five newly caught juvenile *Pseudemys nelsoni* and one juvenile *P. floridana* from Alachua County, Florida. Two of the *P. nelsoni* (plastron lengths of 105 and 111 mm; weights of 240 and 297 g, respectively) served as stimuli. The subjects were not trained or rewarded for correct responses. During testing they were allowed to exit the T-maze if they turned in the correct direction, otherwise they were forced to rerun the maze. If they did not turn correctly on their third attempt they were placed in a bucket until their next trial as punishment. This procedure was run for 16 weeks. The number of trials/block was greater later in the experiment as the turtles negotiated the maze more quickly and with fewer errors.

I tested the significance of the percent correct using the normal approximation to the binomial (one-tailed, HINES and MONTGOMERY, 1980).

Results

This procedure did not work as well as the procedure used in Experiment 1, as subjects often panicked when put in the maze, even after many weeks of testing, and took much longer to perform well. I divided the trials into two approximately equal groups and tested each separately for significance (Fig. 3). Further subdivisions were not made because additional information gleaned from the data was offset by a loss of statistical power. In the earlier group, only the *Pseudemys floridana* juvenile did better than chance at discriminating between the two *P. nelsoni* in the baskets. All animals except one *P. nelsoni* (subject A) appeared to be making the discrimination by the end of the experiment but none did as well as subject 1 in Experiment 1. Even subject A improved towards the end of the experiment. In the last 8 blocks (146 trials) this subject averaged 61% correct ($p = 0.004$, binomial test).

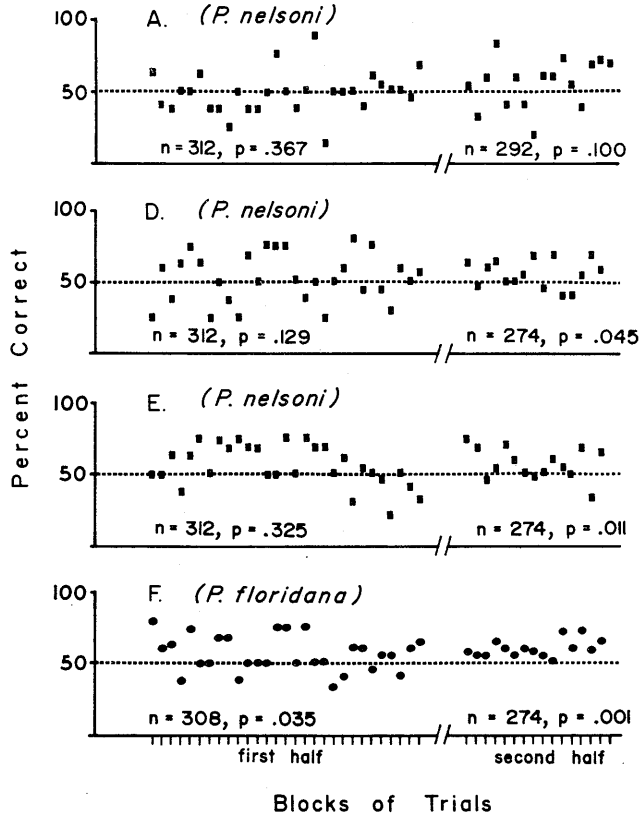

FIGURE 3. Percent correct of each block of trials for subjects (*Pseudemys nelsoni* and *P. floridana*) in Experiment 2. The blocks were divided into two groups and the significance of each group for each turtle was tested separately.

FIGURE 3. Pourcentage de choix corrects dans chaque tranche d'essais pour les sujets de l'expérience 2. Les tranches étaient divisées en deux groupes et chaque groupe a été testé pour mesurer une difference significative non-aléatoire.

DISCUSSION

The results suggest that juveniles of both species may be able to discriminate between two similar conspecifics in the laboratory and that juvenile *Pseudemys floridana* can discriminate between two similar *P. nelsoni*. Although these experiments do not prove that these turtles have individual recognition, they do suggest that the animals possess the sensory and memory capabilities necessary for its existence.

Given the length of the training period, number of trials in both experiments, and disposition of the animals during testing, I suggest that the method of positively reinforcing correct choices (Experiment 1) yields better results with turtles than negatively reinforcing them for incorrect choices

(Experiment 2). Subjects in the first experiment panicked infrequently and appeared eager to enter the maze. In contrast, subjects in the second experiment hid under the maze or in the cinder block cavities while other subjects were tested. The results of the two experiments are not, however, directly comparable. Trained animals in Experiment 1 probably did not find the testing apparatus aversive, while those in Experiment 2 probably did, in addition to their incorrect choices being punished.

It is often frustrating to try to empirically demonstrate mental abilities that animals appear to use in the field (CHENEY et al., 1986). Although detailed notes of every trial were not taken, it appeared that the major difficulty in Experiment 1 was the subjects' inability to consistently pass the basket holding the positive stimulus, rather than stop in front of it. In some trials, after stopping, they did not continue in the same direction and so were not rewarded. Their poor performance is evident when the percent correct of the training and testing blocks (Table 1 and Fig. 2) are compared. In few blocks of trials were animals earning rewards more than 80% of the time. Similar difficulties have been reported by BUTLER and JOHNSON (1972), who tested operantly trained sunfish (*Lepomis macrochirus*) for individual discrimination. Their subjects did not meet their (unstated) criterion, although they apparently performed better than chance (p not given). PETRILLO and POWERS (1987) had to use very modest criteria for testing spatial learning in the turtle, *Chrysemys picta*.

Punishing turtles (Experiment 2) adversely affected the performance of these animals to the point where hundreds of trials were needed to show signs of improvement (Fig. 3). This or a similar procedure is not recommended for testing discriminative abilities of turtles.

As an alternative to training animals, some authors have manipulated social contexts to demonstrate individual recognition capabilities (e.g., GLINSKI and KREKORIAN, 1985; JAEGER, 1981; SIMON and MADISON, 1984; ZAYAN, 1974; 1975; for others see COLGAN, 1983; ZAYAN, 1974). Reliance is not placed on learning abilities but on observable, natural patterns of behavior. In light of the difficulties encountered during the present study, this approach should be considered in future research using turtles.

Acknowledgements: I thank J. Balcombe, G.M. Burghardt, E. Font, N. Greenberg, J. Schwartz and two anonymous reviewers for critically reading the manuscript. C. Auvraud-Kramer, Louis Provencher and an anonymous reviewer greatly improved the French abstract, figure and table legends.

REFERENCES

ANDREWS, R.M. 1985. Mate choice by females of the lizard, *Anolis carolinensis*. J. Herpetol. 19, 284-289.

AUTH, D.L. 1975. Behavioral ecology of basking in the yellow-bellied turtle, *Chrysemys scripta scripta* (Schoepff). Bull. Florida State Mus. Biol. Sci. 20, 1-45.

BOYCOTT, B.B. and R.W. GUILLERY. 1962. Olfactory and visual learning in the red-eared terrapin, *Pseudemys scripta elegans* (Wied). J. Exp. Biol. 39, 567-577.

BURGHARDT, G.M. 1977. Learning processes in reptiles. In: The Biology of the Reptilia. Volume 7. C. GANS and D. TINKLE (Eds.), Academic Press, N.Y., 555-681.

BURY, R.B.J., J.H. WOLFHEIM, and R.A. LUCKENBACK. 1979. Agonistic behavior in free-living painted turtles (*Chrysemys picta bellii*). Biol. Behav. 179, 227-239.
BUTLER, M. and D.A. JOHNSON. 1972. A test of individual recognition in bluegill sunfish using operant procedures. Virg. J. Sci. 23, 149.
CASTEEL, D.B. 1911. The discriminative ability of the painted turtle. J. Animal Behav. 1, 1-28.
CHENEY, D.R., R. SEYFARTH, and B. SMUTS. 1986. Social relationships and social cognition in nonhuman primates. Science 234, 1361- 1366.
COLGAN, P. 1983. Comparative Social Recognition. John Wiley & Sons, N.Y. 281 pp.
CREWS, D. 1985. Inter- and intraindividual variation in display patterns in the lizard, *Anolis carolinensis*. Herpetologica 31, 37-47.
DUGAN, B. 1982. A field study of the headbob displays of male green iguanas (*Iguana iguana*): Variation in form and context. Anim. Behav. 30, 327-338.
EVANS, L.T. 1940. Effects of testosterone propionate upon social dominance in young turtles, *Chrysemys picta*. Biol. Bull. 79, 371.
EVANS, L.T. 1952. Endocrine relationships in turtles. III. Some effects of male hormone in turtles. Herpetologica 8, 11-14.
EVANS, L.T., W. PRESTON, and E. HARDY. 1973. Imprinting in *Chrysemys* turtles. Am. Zool. 13, 1269 (abstr. 4).
EVANS, L.T., W. PRESTON, and M.E. MCGEARY. 1974. Imprinting in turtles. Am. Zool. 14, 1278 (abstr. 352).
FANTINO, E. 1973. Aversive control. In: The Study of Behavior: Learning, Motivation, Emotion, and Instinct. J.A. NEVIN and G.S. REYNOLDS (Eds.), Scott, Foresman and Co. Glenview, Ill., 238-279.
FERGUSON, G.W. 1971. Observations on the behavior and interactions of two sympatric *Sceloporus* in Utah. Amer. Midl. Nat. 86, 190- 196.
GLINSKI, T.H. and C. O'NEIL KREKORIAN. 1985. Individual recognition in free-living adult male desert iguanas, *Dipsosaurus dorsalis*. J. Herpetol. 19, 541-544.
HARLESS, M. 1979. Social behavior. In Turtles: Perspectives and Research. M. HARLESS and H. MORLOCK (Eds.), John Wiley & Sons, N.Y., 475-492.
HEIDT, G.A. and R.C. BURBIDGE. 1966. Some aspects of color preference, substrate preference and learning in hatchling *Chrysemys picta*. Herpetologica 22, 288-292.
HINES, W.W. and D.C. MONTGOMERY. 1980. Probability and Statistics in Engineering and Management Science. Second edition. John Wiley & Sons, N.Y. 634 pp.
JAEGER, R.J. 1981. Dear enemy recognition and the costs of aggression between salamanders. Am. Nat. 117, 962-974.
JOHNSON, V.R. 1977. Individual recognition in the banded shrimp, *Stenopus hispidus* (Oliver). Anim. Behav. 25, 418-428.
KRAMER, M. 1986. Field studies on a freshwater Florida turtle, *Pseudemys nelsoni*. In: Behavioral ecology and population biology. L.C. DRICKAMER (Ed.), Privat, I.E.C. Toulouse, France, 29-34.
LARDIE, R.L. 1983. Aggressive interactions among melanistic males of the red-eared slider, *Pseudemys scripta elegans* (Wied). Bull. Oklahoma Herpetol. Soc. 8, 105-117.
LOVICH, J.E. 1984. An analysis of aggressive basking behavior in the eastern painted turtle. Master's Thesis, George Mason University. 79 pp.
MCBRIDE, G. 1964. A general theory of social organization and behaviour. Univ. of Queensland Fac. Papers Vet. Sci. 1, 75- 110.
MCDONALD, D.M. 1987. The significance of male dewlap color in female mate selection of *Anolis carolinensis* (Iguanidae) from south Florida. Master's Thesis, University of Tennessee, Knoxville. 55 pp.
MCDOWELL, S.B. 1964. Partition of the genus *Clemmys* and related problems in the taxonomy of the aquatic Testudinidae. Proc, Zool. Soc. London 143, 239-279.
PETRILLO, M.A. and A.S. POWERS. 1987. Disruption in maze performance after cortical lesions in turtles (*Chrysemys picta*). Soc. Neurosci. Abs. 13, 1125.
SIMON, G.S. and D.M. MADISON. 1984. Individual recognition in salamanders: Cloacal odours. Anim. Behav. 32, 1017-1020.
SHETTLEWORTH, S. 1984. Learning and behavioural ecology. In: Behavioural ecology: An evolutionary approach. Second Edition. J.R. KREBS and N.B. DAVIES (eds.). Sinauer Assoc., Inc., Sunderland, Mass., 170-194.
SPIGEL, I.M. 1963. Running speed and intermediate brightness discrimination in the freshwater turtle, *Chrysemys*. J. Comp. Physiol. Psych. 56, 924-928.
TRILLMICH, F. 1976. Spatial proximity and mate-specific behaviour in a flock of budgerigars (*Melopsittacus undulatus*). Z. Tierpsychol. 41, 307-331.
ZAYAN, R.C. 1974. Le rôle de reconnaissance individuelle dans la stabilité des relations hierarchiques chez *Xiphophorus* (Pices, Poeciliidae). Behaviour 49, 268-312.
ZAYAN, R.C. 1975. Défense du territoire et reconnaissance individuelle chez *Xiphophorus* (Pices, Poeciliidae). Behaviour 52, 266-312.