**A**gricultural
**R**esearch
**S**ervice

**G**razinglands
**R**esearch
**L**aboratory
**GRL 1-11**

# SYNTOR

## A Synthetic Daily Weather Generator
## Version 3.5

# USER MANUAL


**Prepared by**

**JURGEN GARBRECHT and PHILLIP BUSTEED**

**USDA, AGRICULTURAL RESEARCH SERVICE,**
**GRAZINGLANDS RESEARCH LABORATORY,**
**7207 WEST CHEYENNE St., EL RENO, OKLAHOMA 73036, USA**



November 2011

i. Nondiscrimination statement

The U.S. Department of Agriculture (USDA) prohibits discrimination in all programs and activities on the basis of race, color, national origin, sex, religion, age, disability, political beliefs, sexual orientation, or martial or family status (Not all prohibited bases apply to all programs.). Persons with disabilities who require alternative means for communication of program information (Braille, large print, audiotape, etc.) should contact USDA's TARGET Center at (202) 720-2600 (voice and TDD). To file a complaint of discrimination, write USDA, Office of Civil Rights, Room 326-W, Whitten Building, 1400 Independence Avenue, SW, Washington, D.C. 20250-9410 or call (202) 720-5964 (voice and TDD). USDA is an equal opportunity provider and employer.

ii. Product disclaimer statement

The use of trade, firm, or corporation names in this publication is for the information and benefit of the reader. Such use does not constitute an official endorsement or approval by the U.S.D.A. Agricultural Research Service of any product or service to the exclusion of others that may be suitable.

iii. SYNTOR Disclaimer

SYNTOR programs and subroutines are accepted and used by the recipient upon the expressed understanding that the developers make no warranties, expressed or implied, concerning the accuracy, completeness, reliability, or suitability for any one purpose, and that the developers shall be under no liability or obligation to any person, institution, organization or corporation by reason of any use made thereof. SYNTOR programs and subroutines cannot be lifted, extracted or transferred out of SYNTOR for stand-alone use with other programs or for any other purpose. SYNTOR programs and subroutines are highly interdependent and operate in an integrated fashion. Inappropriate use of programs and subroutines for other purposes than within SYNTOR may produce, at best, unexecutable code, or, at worst, inconsistent and erroneous results that go unrecognized.

Return to Table of Contents

Return to Main Table of Contents

Table of Contents

i. NONDISCRIMINATION STATEMENT
ii. PRODUCT DISCLAIMER STATEMENT
iii. SYNTOR DISCLAIMER

1. OVERVIEW
   1.1 Introduction
   1.2 Capabilities and Limitations
   1.3 Data Requirements
   1.4 SYNTOR Organization
   1.5 File Types
      1.5.1 Control Files
      1.5.2 Weather Files
      1.5.3 Report Files
      1.5.4 Data Files
      1.5.5 Text Files
      1.5.6 Unformatted Files
   1.6 Program Specifications
   1.7 References
   1.8 Tables and Figures

2. PROGRAM SYNCHK
   2.1 Program Overview
   2.2 Input Files
      2.2.1 File SYNCHK.CTR
      2.2.2 File SYNCHK.WTH
      2.2.3 Interactive User Input
   2.3 Quality Control of Weather Data
   2.4 Program Execution
   2.5 Output Files
      2.5.1 File SYNCHK.RPT
      2.5.2 File CTRUSER.TXT
      2.5.3 File WTHUSER.DAT
      2.5.4 File WTHCHK.DAT
      2.5.5 File WTHCHK.UNF
      2.5.6 File PRGCNT.UNF
   2.6 References
   2.7 Tables and Figures

3. PROGRAM SYNPAR
   3.1 Program Overview
   3.2 Input Files
      3.2.1 File WTHCHK.UNF
      3.2.2 File PRGCNT.UNF
   3.3 Program Execution
   3.4 Output Files
      3.4.1 File SYNPAR.RPT
      3.4.2 File STACOF.DAT
      3.4.3 File PTFOR.DAT
      3.4.4 File STACOF.UNF
      3.4.5 File PRGCNT.UNF
   3.5 Tables and Figures

4. PROGRAM SYNGEN
   4.1 Program Overview
   4.2 Input Files
      4.2.1 File SYNGEN.CTR
      4.2.2 File STACOF.UNF
      4.2.3 File SYNPAR.UNF
   4.3 Program Execution
   4.4 Output Files
      4.4.1 File SYNGEN.RPT
      4.4.2 File CTRGEN.TXT
      4.4.3 File GENWTH.DAT
      4.4.4 File GENWTH.UNF (only for program extensions)
      4.4.5 File PRGCNT.UNF (only for program extensions)
   4.5 Tables and Figures

5. INSTALLATION AND EXECUTION OF SYNTOR PROGRAMS
   5.1 Installation Steps
   5.2 Execution
   5.3 Verification
   5.4 Tables and Figures

# USER MANUAL

SYNTOR Version 3.5

## 1 OVERVIEW

### 1.1 Introduction

SYNTOR Version 3.5 generates time-series of synthetic daily precipitation, daily minimum and maximum air temperature, and daily solar radiation at a location of interest. A record of historical weather observations for that location must be provided to calculate weather statistics needed for weather generation. Synthetic weather can be generated that represents the historical weather characteristics or a seasonal climate forecast. This manual provides a brief overview of SYNTOR programs, user options, input requirements, and program operation.

Note: the Quality Assurance component of SYNTOR is in the initial stages of testing.

### 1.2 Capabilities, Assumptions, and Limitations

SYNTOR can generate time-series of up to 10’000 years of synthetic weather data, consisting of daily precipitation, minimum and maximum air temperature, and solar radiation at a location of interest. Precipitation is generated independently from the other weather variables. Minimum and maximum air temperature and solar radiation are conditioned on the wet or dry status of the current day, and generated by a multivariate model that preserves the serial correlation (dependence in time) and cross correlation (dependence across variables) between the air temperature and solar radiation variables. Synthetic weather can be generated that represents historical weather characteristics or a seasonal climate forecast. All generated weather data are in metric units.

Generation of synthetic weather data is subject to assumptions and limitations. Most importantly, it is assumed that:
- The climate of the user-provided historical weather data is time invariant (no major shifts or trends in the weather record).
- Occurrence of rainy days is adequately quantified by a first order, two-state Markov chain.
- Daily precipitation amount is adequately represented by a mixed exponential distribution (sometimes referred to as double exponential distribution).

- Daily minimum and maximum air temperature and daily solar radiation are adequately approximated by normal distributions conditioned on the wet or dry status of the current day (separate normal distribution for wet and dry days).
- Serial-correlation and cross-correlation coefficients developed by Richardson and Wright (1984) for the continental United States adequately approximate the inter-dependencies between daily air temperature and solar radiation.
- Seasonal variations in weather are accounted for by different distribution parameter values for each calendar month.

Additional model-specific assumptions are given in subsequent sections as required for model description.

## 1.3 Data Requirements

SYNTOR requires historical (observed) daily precipitation, minimum and maximum air temperature, and solar radiation, and, optionally, seasonal climate forecast specifications. In addition, it requires general application information, program execution control parameters, and user options for weather generation.

Specific requirements:
- A continuous, uninterrupted and error free record of historical daily weather data in English units (inches, degrees Fahrenheit, and Langleys), or in metric units (millimeters, degrees Celsius, and Mega Joules per square meter [MJ/m^2]). If the provided weather data is in English units, SYNTOR converts it to metric units.
- A minimum of 20 years of historical daily precipitation data.
- A total of at least 20 rainy days for each calendar month over the entire record of historical weather. This constraint is necessary to fit a mixed exponential distribution to the daily precipitation, calculate transition probabilities, and perform necessary regressions.
- A minimum of 10 years of historical daily minimum and maximum air temperature.
- A minimum of 10 years of historical daily solar radiation data.
- Latitude of the weather station and location under consideration.

If the seasonal climate forecast option is activated, the following information is also required:
- Forecasted average monthly total precipitation, and average monthly mean air temperature.

Notes:
- 30 or more years of historical weather data are recommended to derive representative and stable weather generation statistics.
- The user provided historical weather data must pass the quality assurance testing of SYNTOR.
- Weather data errors and missing data values must be resolved by the user.

## 1.4 SYNTOR Organization

SYNTOR consists of three programs: SYNCHK, SYNPAR and SYNGEN.

- Program SYNCHK reads the user-provided weather data and user options, quality controls the weather data, and determines that portion of the weather record that is usable by SYNTOR. This program ensures that the execution of subsequent SYNTOR programs is problem free.
- Program SYNPAR computes basic statistics, regression coefficients, and distribution parameters of the usable weather data for subsequent generation of synthetic weather.
- Program SYNGEN generates a time-series of daily precipitation, air temperature, and solar radiation that reflect the historical weather characteristics or seasonal climate forecast conditions.

The SYNTOR programs are interdependent and must be applied in sequential order as shown in Fig. 1.1.

## 1.5 File Types

SYNTOR files are one of six types: control files, weather data files, report files, general data files, text files, and unformatted files.
With the exception of the unformatted files, all files are in ASCII format and can be viewed with a suitable ASCII editor (Wordpad, Notepad, etc.).

### 1.5.1 Control Files

Control files are sequential, formatted ASCII files with extension .CTR. Data in these files are provided by the user. Data consist of titles, application information, weather generation options, program control parameters, and other program execution options. The templates for control files contain definitions of user options, required units, and data type.

### 1.5.2 Weather files

The weather file is a sequential, formatted ASCII file with extension .WTH. This file must be provided by the user. It contains the historical/observed daily weather data at the location for which synthetic weather is to be generated.

### 1.5.3 Report files

Report files are sequential, formatted ASCII files with extension .RPT. These files are produced by SYNTOR programs. They provide program execution information for the user. Information includes program execution trace, verification variables, and error, warnings and caution messages. These files are not used by SYNTOR programs. The user is encouraged to review these files, as they may contain information that may affect the quality of the generated weather.

### 1.5.4 Data Files

Data files are sequential, formatted, ASCII files with extension .DAT. These files are produced by SYNTOR programs and contain weather data, weather statistics, regression coefficients, distribution parameter, etc. These files are not used by SYNTOR programs. They are available to the user for viewing, spreadsheet analysis, or plotting.

### 1.5.5 Text Files

Text files are sequential, formatted, ASCII files with extension .TXT. These files are produced by SYNTOR programs and contain primarily text information and verification of user and program execution options.

### 1.5.6 Unformatted Files

Unformatted files have extension .UNF. These files are generated and used by SYNTOR programs. Their primary purpose is the transfer of data between SYNTOR programs. The user should not access, read, or delete these files.

## 1.6 Program Specifications

SYNTOR programs are written in FORTRAN 90/95. Executable programs SYNCHK.EXE, SYNPAR.EXE, and SYNGEN.EXE have been compiled with the Silverfrost FTN95 Version 6.0 compiler. SYNTOR programs in executable format are for WINDOWS 95/98, ME, XP, VISTA and Windows7 operating systems. SYNTOR executable programs do not transfer to other computing platforms (i.e. Mac, UNIX, etc.).

## 1.7 References

Richardson, C.W. and D.A. Wright. 1984. WGEN: A Model for Generating Daily Weather Variables. USDA Agricultural Research Service, Publication ARS-8, 8pp. (Available from U.S. Dept. of Agriculture, Agricultural Research Service, 808 E. Blackland Rd., Temple, Texas.)

1.8 Tables and Figures.

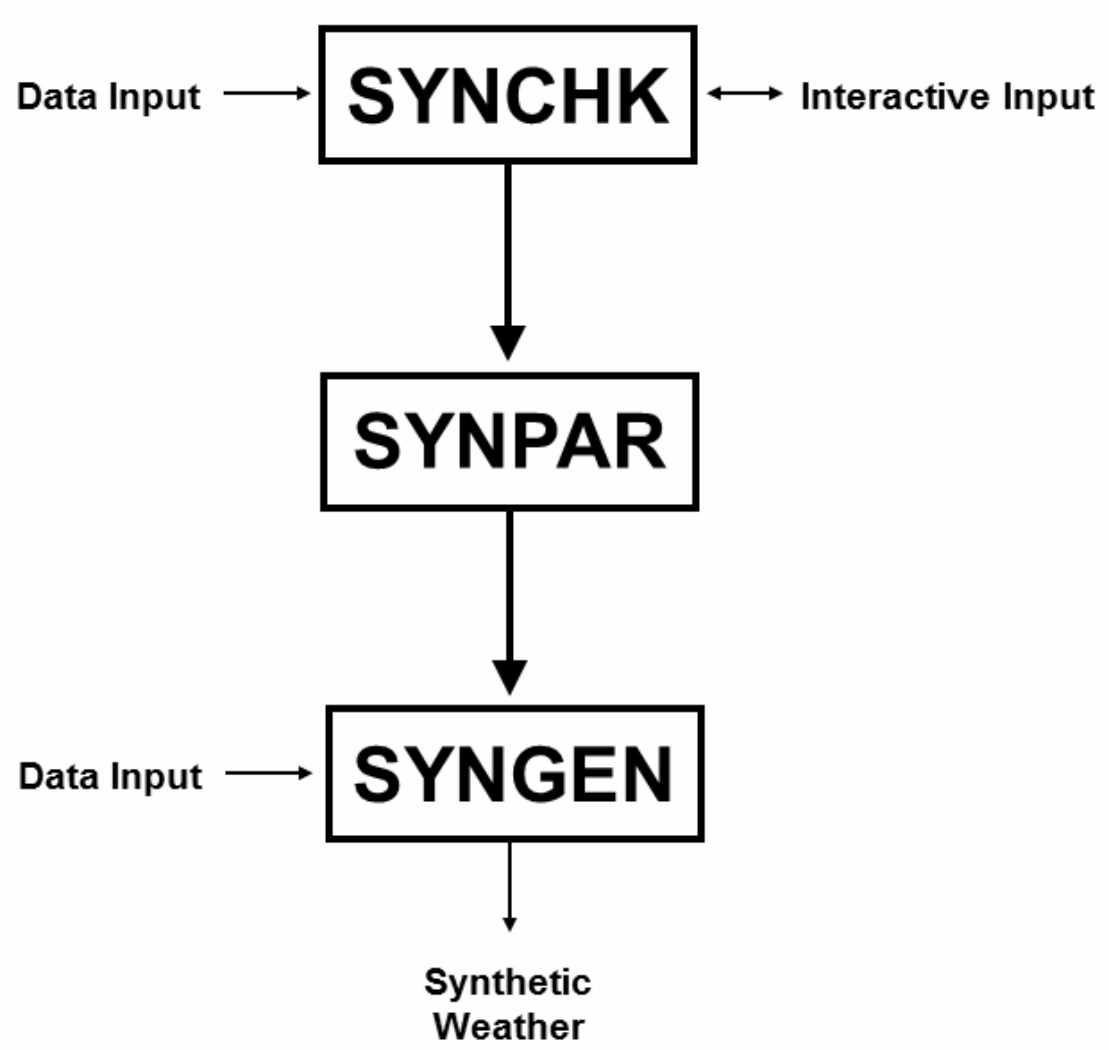


Figure 1.1. Sequence of execution of SYNTOR programs.

Return to Table of Contents

# 2. PROGRAM SYNCHK

## 2.1 Program Overview

Program SYNCHK reads input data, screens the data for errors, identifies missing values, and determines the length of the usable weather record in file SYNCHK.WTH. If errors are encountered in the data, then program execution stops with an error message describing the problem. The user must resolve all problems and correct all errors in the input data before being able to proceed with subsequent SYNTOR programs. Program SYNCHK ensures problem free execution of subsequent SYNTOR programs. A diagram of input and output files for program SYNCHK is given in Figure 2.1.

## 2.2 Input files

Program SYNCHK requires two user-provided ASCII input files: SYNCHK.CTR and SYNCHK.WTH. The first file contains general application information, program control parameters, and user options. The second file contains the user-provided historical/observed weather data at the location for which synthetic weather is to be generated.

### 2.2.1 File SYNCHK.CTR

File SYNCHK.CTR contains general application information, including application titles, information on the weather station, weather options, and weather units. The specific input variables and the file record number on which they appear are given in Table 2.1. An example of file SYNCHK.CTR is shown in Figure 2.2.

### 2.2.2 File SYNCHK.WTH

File SYNCHK.WTH contains the user provided historical daily weather data. The first record in this file describes the weather station (name, identification, location, etc.) of the weather data. SYNTOR assumes the information on this record is a title and uses it as a title in output files. The first record can be followed by up to 98 documentation records. The record immediately after the last documentation record must contain the value “111” (left justified). It indicates the end of documentation and the beginning of the daily weather data. The last two records immediately following the last daily weather data record must contain the value “999” (left justified). These two records containing "999" identify the end of the daily weather data and the end of the file. The weather file cannot contain over 735000 daily weather records (2000 years).

The format of the weather data is one day of weather data per record, each record consisting of year, month, day, precipitation, minimum air temperature, maximum air temperature, and solar radiation. Air temperature and solar radiation values are optional, as specified in file SYNCHK.CTR. Records must be in chronologic order, oldest first and most recent last. Leap years are allowed. The weather data must start on the first day of a

year (1 January) and end on the last day of a year (31 December). Each year must contain 365 (or 366 for leap years) weather records. Weather data type can be either integer or real, or mixed alternating between integer and real. Missing values for precipitation, air temperature and solar radiation must be assigned an integer or real value of -999 or -999.0, respectively. Missing weather data values will terminate the usable portion of weather data. Therefore, the user is encouraged to provide a weather data set without missing values.

Soltani and Hoogenboom (2003) recommended a minimum of 15 years of weather data to generate weather sequences with statistical characteristics similar to the observed weather record. Richardson (2000) found that 20 or more years of precipitation data were needed to achieve stable statistical estimates of precipitation characteristics, and 10 years for minimum and maximum air temperature. Richardson also noted that the amount of data required to achieve stability depended on several factors, including climate, weather variable (precipitation or temperature), and season of the year. Wan et al (2005) considers 30 years to be sufficiently long for model assessment. Based on the cited literature, SYNTOR requires a minimum of 20 years of precipitation data, and over this 20 year period each calendar month must have a total of at least 20 daily precipitation values. Only 10 years of daily minimum and maximum air temperature and 10 years of daily solar radiation are required. However, 30 or more years of historical weather data are recommended to derive stable and statistically meaningful values for the weather generation.

SYNTOR assumes that the provided historical weather data has time-invariant and stable climate statistics. Thus, the weather data should be free of long term systematic trends, large persistent variations, or shifts lasting several decades. SYNTOR generates weather data that display time invariant climatic characteristics.

Note:
Year 1900 is divisible by 4 and should be a leap year. However, year 1900 is an exception to the rule. Year 1900 does not have a leap day of 29 February, and there are no weather observations for that date. Nevertheless, SYNTOR algorithms expect year 1900 to be a leap year with a leap day of 29 February. Therefore, the user must insert a leap day of 29 February for year 1900 and assign weather values. For example, the user can assign the average weather value on 28 February and 1 March.

### 2.2.3 User Interactive Input

During the execution of program SYNCHK, the program may require additional input from the user. In the event SYNTOR detects a significant irregularity or error in the user-provide weather data, the program will pause and ask the user if they wish to override this likely problem or error and proceed with the processing of the weather data, or terminate program execution. If the user elects to proceed with the processing of the weather data, then they are required to enter the number “1”. On the other hand, if the user elects to terminate the program execution and examine the weather data problem, then the user must enter the number “0”.

## 2.3 Quality Control of Weather Data

The weather data provided in file SYNCHK.WTH is quality controlled by program SYNCHK. There are two levels of quality control. The first level consists of fatal errors and causes the program execution to be terminated. Fatal errors include errors that cause program malfunction (such as negative precipitation values), data that are outside of normal boundary conditions (such as solar radiation values above/below the theoretical maximum/minimum value), and weather sequences that do not meet minimum record length requirements or exceed program capabilities (such historical weather data that contain entire years without any precipitation). The user cannot override a fatal error.

The second level of quality control consists of non-fatal errors, warnings and cautions (such as the presence of a systematic long term weather trend, or a multi-decadal annual precipitation variation). Non-fatal errors cause the program execution to be interrupted, and the user is given the option to terminate the program execution and correct the error, or to override the error and proceed with data processing. Overriding suspicious and potentially erroneous data is not recommended as it may affect the quality of the generated weather, or lead to problems in subsequent program execution. Warnings and cautions identify minor data quality problems, are written to the report file, and do not cause the program execution to be terminated. They are intended to alert the user of potential problems during subsequent data processing.

Note: The quality control of the weather data is currently under testing (Nov. 2011).

## 2.4 Program Execution

Once input files SYNCHK.WTH and SYNCHK.CTR are prepared, program SYNCHK can be executed. During processing, run-time messages will appear on the screen to inform the user on the status of the weather data processing. The weather data is quality controlled. If a “fatal error” is encounter (refer to the previous section on Quality Control), a message identifying the problem is issued, and program execution is terminated. The user must correct the error and re-run program SYNCHK. If a major, but non-fatal, “data quality error”, inconsistency, or incompatibility is encountered, a message identifying the problem is issued, and program execution is interrupted. At that point, the user is given the option to override the suspicious and potentially erroneous data issue, or stop the program execution and resolve the issue at the input file level. If the data quality problem is moderate or minor, a warning or caution message is written to the report file SYNCHK.RPT, and program execution continues.

After completion of program SYNCHK, the user should check the final length of the SYNTOR-defined usable weather record in file SYNCHK.RPT and WTHCHK.DAT to ensure that it is adequate and appropriate for the intended application of the synthetic weather.

## 2.5 Output files

Program SYNCHK produces four user-accessible ASCII output files that can be viewed with a suitable ASCII editor, such as Microsoft Notepad or Wordpad. The four output files are SYNCHK.RPT, CTRUSER.TXT, WTHUSER.DAT and WTHCHK.DAT. SYNCHK also produces two unformatted files WTHCHK.UNF and PRGCNT.UNF that are needed by program SYNPAR. These two unformatted files are not accessible to the user and should not be changed, moved, or deleted by the user.

### 2.5.1 File SYNCHK.RPT

File SYNCHK.RPT contains a detailed log of program execution steps, including error, warning, and caution statements, and pertinent data that may be of interest to the user. It is recommended that the user carefully review this file and become aware of any relevant data quality problems. The user may want to verify or revise the weather input data if error, warning, or caution statements were issued.

### 2.5.2 File CTRUSER.TXT

File CTRUSER.TXT contains a replication of the general program control information read by program SYNCHK from file SYNCHK.CTR. It serves primarily as verification that program SYNCHK received and used the correct general program information.

### 2.5.3 File WTHUSER.DAT

File WTHUSER.DAT contains a replication of the user provided daily weather data read by program SYNCHK from file SYNCHK.WTH. It serves primarily as verification that program SYNCHK correctly received the daily weather data.

### 2.5.4 File WTHCHK.DAT

File WTHCHK.DAT contains the quality controlled and usable weather data, as determined by program SYNCHK. Only usable weather data are transferred to program SYNPAR for further evaluation and processing. As a result of the quality control, the usable weather data may, or may not, include the entire user-provided weather data. The user is advised to carefully review the weather data contained in this file to ensure that the usable weather record is adequate and acceptable for user intended application of the generated synthetic weather.

### 2.5.5 File WTHCHK.UNF

Unformatted file WTHCHK.UNF contains the same usable weather data as in file WTHCHK.DAT. This file is used to transfer usable weather data to program SYNPAR. This file is not accessible to the user and should not be changed, moved, or deleted by the user.

### 2.5.6 File PRGCNT.UNF

Unformatted file PRGCNT.UNF contains the same program control data as in file CTRUSER.TXT. This file is used to transfer program control variables to other SYNTOR programs. This file is not accessible to the user and should not be changed, moved, or deleted by the user.

## 2.6 References

Richardson, C. W. 2000. Data Requirements for Estimation of Weather Generation Parameters. Transactions of the American Society of Agricultural Engineers, 43(4):877-882.

Soltani, A., and G. Hoogenboom. 2003. Minimum Data Requirement for Parameter Estimation of Stochastic Weather Generators. Climate Research, 25:109-119

Wan, H., X. Zhang, and E. M. Barrow. 2005. Stochastic Modeling of Daily Precipitation for Canada. Atmosphere-Ocean, 43(1):23-32.

## 2.7 Tables and Figures

Table 2.1. List of input variables of file SYNCHK.CTR

| Record number | Content |
|---|---|
| 7 - 8 | Title (up to 80 characters per record) |
| 12 | Latitude of weather station in degrees, minutes and seconds |
| 16 | Longitude of weather station in degrees, minutes and seconds |
| 23 | Weather variable options |
| | 1 : Date and precipitation only |
| | 2 : Date, precipitation, and min and max air temperature |
| | 3 : Date, precipitation, min and max air temperature, and solar radiation |
| 29 | Units of precipitation |
| | 0 : millimeters |
| | 1 : inches |
| 36 | Units of air temperature |
| | 0 : degrees Celsius |
| | 1 : degrees Fahrenheit |
| | -99 : for not applicable |
| 43 | Units of solar radiation |
| | 0 : Mega Joules per square meter [MJ/m^2] |
| | 1 : Langleys |
| | -99 : for not applicable |

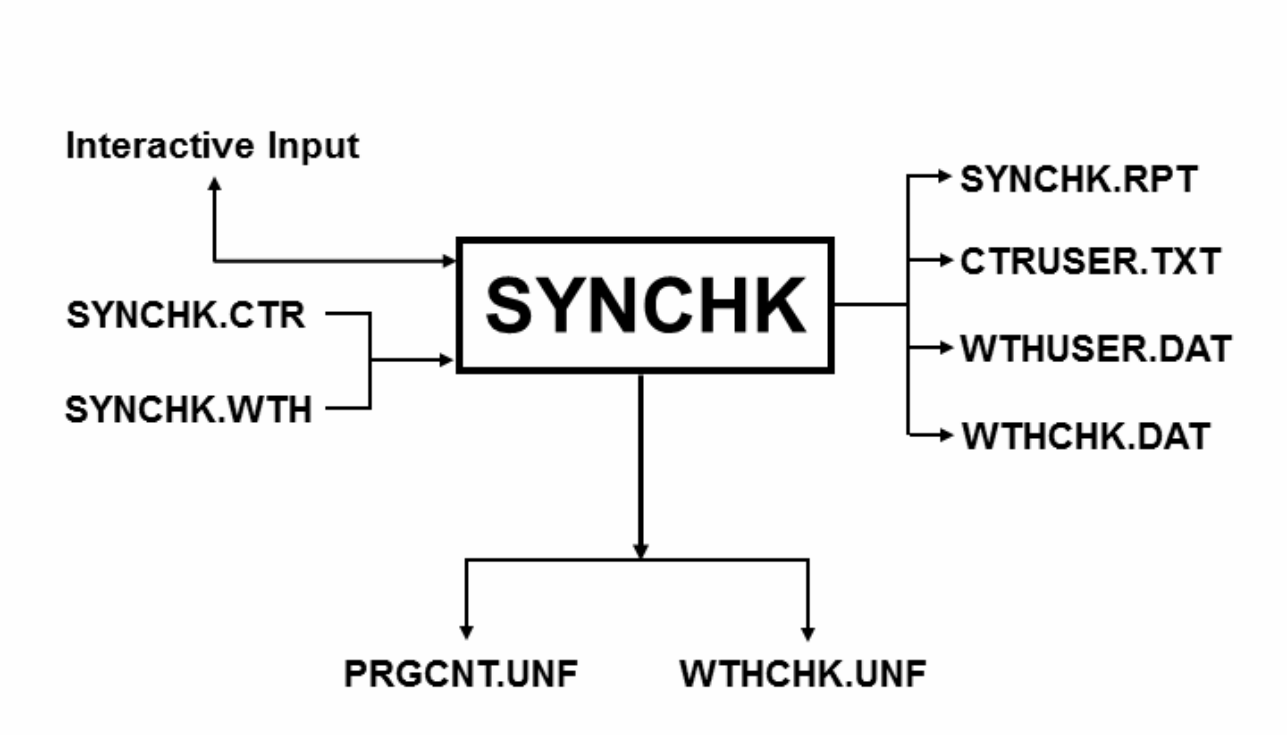


Figure 2.1. Block diagram of input and output files for program SYNCHK.

```
----------------------------------------------------------------------------------------------------------------
! User provided file SYNCHK.CTR
! This input file contains an application title, general data information,
! and program execution control values/options for program SYNCHK.
! ***
! Enter the title of the data set or application.
! [Alpha-numeric; 2 lines; 80 characters per line]
 Temple, Texas, Weather data set; Agency: Texas A&M and USDA-ARS.
 Verification application, March 2005
! ***
! Enter the latitude of the location in degrees, minutes and seconds.
! [Integer; 3 values separated by a space: deg (+90 to -90); min (0 to 59); sec (0 to 59)]
  31 03 23
! ***
! Enter the longitude of the location in degrees, minutes and seconds.
! [Integer; 3 values separated by a space: deg (+180 to -180); min (0 to 59); sec (0 to 59)]
 -97 20 55
! ***
! Enter option for weather data contained in file SYNCHK.WTH:
!      1 : Date and precipitation only;
!      2 : Date, precipitation, and min & max air temperature;
!      3 : Date, precipitation, min & max air temperature, and solar radiation.
! [Integer; accepted values are 1, 2 or 3]
 3
! ***
! Enter the units of precipitation data in file SYNCHK.WTH.
!      0 : Precipitation is in mm.
!      1 : Precipitation is in inches.
! [Integer; accepted values are 0 and 1]
 1
! ***
! Enter the units of air temperature data in file SYNCHK.WTH.
!      0 : Air temperature is in degrees Celsius.
!      1 : Air temperature is in degrees Fahrenheit.
!   -99 : Weather data does not include air temperature and solar radiation.
! [Integer; accepted values are 0, 1, and -99]
 1
! ***
! Enter the units of solar radiation data in file SYNCHK.WTH.
!      0 : Solar radiation is in MJ/m^2.
!      1 : Solar radiation is in Langleys.
!   -99 : Weather data does not include solar radiation.
! [Integer; accepted values are 0, 1, and -99]
 1
!
----------------------------------------------------------------------------------------------------------------
```

Figure 2.2. Example of file SYNCHK.CTR.

Return to Table of Contents

# 3. PROGRAM SYNPAR

## 3.1 Program Overview

Program SYNPAR calculates pertinent daily and monthly weather statistics needed for the generation of synthetic weather data. Statistics include daily and monthly transition probabilities of precipitation, basic weather statistics (i.e. monthly mean, standard deviation, etc.), regression coefficients, and distribution parameters. Program SYNPAR will not work until program SYNCHK has been executed to completion. A diagram of input and output files for program SYNPAR is given in Fig. 3.1.

## 3.2 Input files

Program SYNPAR requires two unformatted input files: WTHCHK.UNF and PRGCNT.UNF. Both of these files are produced by program SYNCHK. No user input files are required.

### 3.2.1 File WTHCHK.UNF

Unformatted file WTHCHK.UNF contains program header, title of current application and the reformatted and quality-controlled daily weather data.

### 3.2.2 File PRGCNT.UNF

Unformatted file PRGCNT.UNF contains titles, application information, coordinates of the weather station, option for weather data processing, and other SYNTOR internal parameter values.

## 3.3 Program Execution

Program SYNPAR is executed after program SYNCHK has run to completion and files WTHCHK.UNF and PRGCNT.UNF have been produced. During program execution, run-time messages will appear on the screen to inform the user of the progress of the weather data processing. Run-time messages and verification data are also written to report file SYNPAR.RPT.

## 3.4 Output Files

Program SYNPAR produces five output files: a report file, two data files, and two unformatted files. The output files are: SYNPAR.RPT, STACOF.DAT, PTFOR.DAT, STACOF.UNF, and PRGCNT.UNF

### 3.4.1 File SYNPAR.RPT

Report file SYNPAR.RPT contains program header, disclaimer, titles of the current application, verification of input variables, program execution trace, and program error and warning messages.

### 3.4.2 File STACOF.DAT

Data file STACOF.DAT contains daily and monthly weather statistics and coefficient derived from the historical weather data. Monthly statistics are provided for each of the 12 calendar months. The file also contains data descriptors and program specific parameter values. This file is not used by SYNTOR and is available to the user for viewing and analysis. A list of variables and parameters that are reproduced in file STACOF.DAT is provided in Table 3.1.

### 3.4.3 File PTFOR.DAT

Data file PTFOR.DAT contains the lower and upper boundaries for average monthly total precipitation and average air temperature that define the range of acceptable values for the user-supplied precipitation and temperature forecasts in file SYNGEN.CTR. The lower and upper boundaries for monthly precipitation and average temperature forecasts correspond to +-30% of the percentiles from the historical monthly mean values. The user can consult this file to ensure that the forecast provided in file SYNGEN.CTR is within SYNTOR-acceptable range.

### 3.4.4 File STACOF.UNF

Unformatted file STACOF.UNF contains the same daily and monthly weather statistics, regression coefficients, distribution parameters, data descriptor, and program parameter values as file STACOF.DAT. This file is used by other SYNTOR programs. This file is not accessible to the user and should not be changed, moved, or deleted.

### 3.4.5 File PRGCNT.UNF

File PRGCNT.UNF contains program control variables, titles, station information, weather data processing options, and other SYNTOR internal parameter values. This file is not accessible to the user and should not be changed, moved, or deleted.

## 3.5 Tables and Figures

Table 3.1 List of monthly weather statistics of the historical weather data and program specific parameter values. Weather related data are provided for each calendar month.

---

- Transition probabilities PW|W and PW|D (wet after wet day, and wet after dry day).
- Mean, st. dev., skew coefficient, and precipitation offset for daily precipitation in mm for rainy days.
- Maximum monthly precipitation value.
- Minimum monthly precipitation value.
- Mean and median monthly total precipitation.
- Mean monthly number of precipitation days.
- Lower and upper forecast boundary of monthly total precipitation.
- Distribution parameter values for the mixed exponential distribution of daily precipitation.
- Slope and $R^2$ of the lin. reg. of number-rainy-days versus precipitation-amount.
- Slope and $R^2$ of the lin. reg. of number of wet-after-wet day versus number of rainy days.
- Slope and $R^2$ of the lin. reg. of number of dry-after-dry day versus number of rainy days.
- Slope and $R^2$ of the lin. reg. of transition probability PW|W versus number of wet days.
- Slope and $R^2$ of the lin. reg. of transition probability PW|D versus number of rainy days.
- Slope and R2 of the lin. reg. of min versus max air temperature.
- Mean and median monthly air temperature value.
- Lower and upper forecast boundary of monthly air temperature.
- Mean and st. dev. of min & max air temperature conditioned on wet/dry days.
- Mean and st. dev. of solar radiation conditioned on wet/dry days.

- Pertinent program specific data parameters such as:
- Weather data availability and processing option.
- Number of usable weather records.
- Number of years of usable weather data being processed.
- Number of years of usable precipitation data.
- Number of years of usable min/max air temperature data (if provided).
- Number of years of solar radiation data (if provided).

---

Lin. Reg. : linear regression
St. dev. : standard deviation

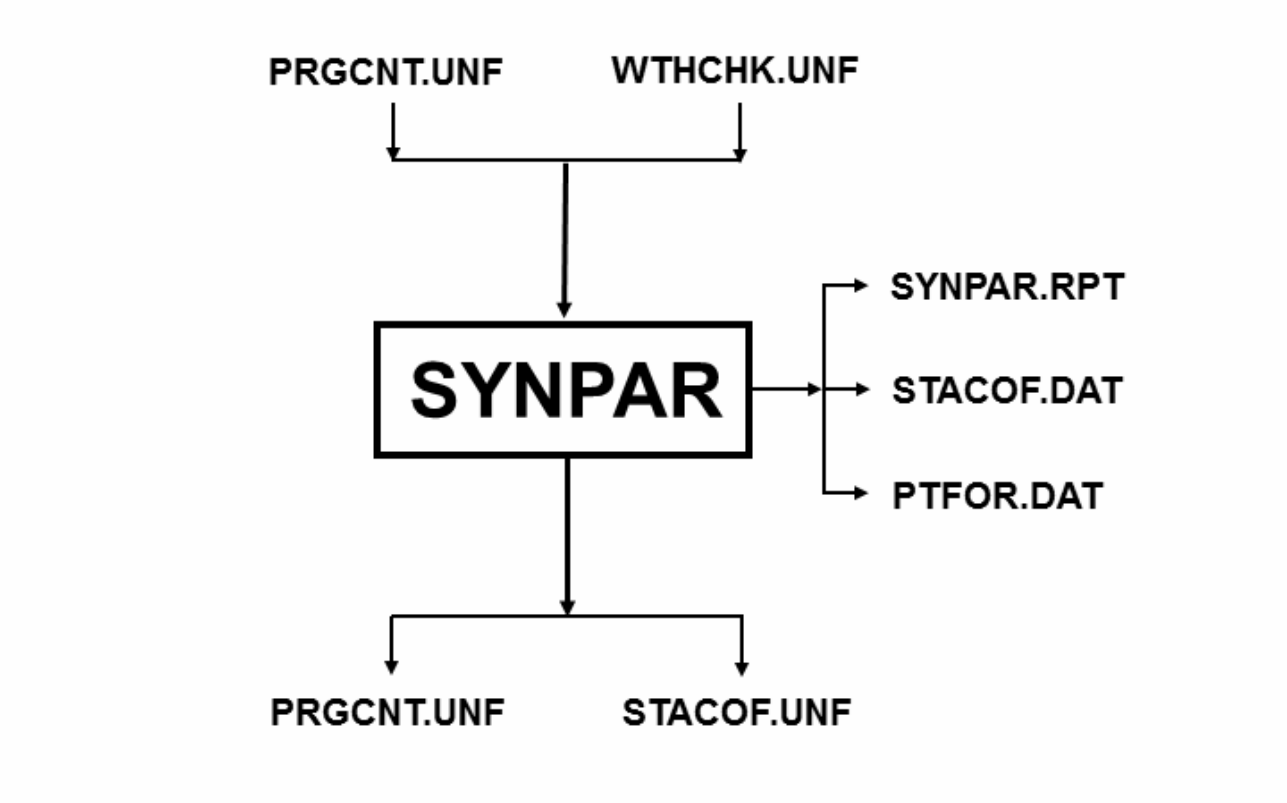


Figure 3.1 Block diagram of input and output files for program SYNPAR.

Return to Table of Contents

# 4. PROGRAM SYNGEN

## 4.1 Program Overview

Program SYNGEN generates the daily precipitation, maximum and minimum air temperature, and solar radiation based on weather statistics derived from the user-provided historical/observed weather data. The user has the option to generate synthetic weather that reproduces the historical climate conditions or seasonal forecasted conditions. The seasonal climate forecast option requires user-provided forecast specifications. Program SYNGEN can be executed repeatedly with different options, forecast specifications, and random number seeds. More details on repeat execution of program SYNGEN is provided in the section on program execution. A diagram of input and output files for program SYNGEN is given in Figure 4.1.

## 4.2 Input Files

Program SYNGEN requires three input files: SYNGEN.CTR, STACOF.UNF, and PRGCNT.UNF. File SYNGEN.CTR is a user provided ASCII input file. STACOF.UNF and PRGCNT.UNF are unformatted files produced by program SYNPAR.

### 4.2.1 File SYNGEN.CTR

File SYNGEN.CTR contains the title for the generated weather, options for the weather generation (historical or forecast conditions), and forecast specifications. The file also contains documentation intended to help the user to provide input data in the correct format.

If the seasonal climate forecast option is selected for weather generation, then the user must also provide forecast specifications. Forecast specifications consist of mean monthly total precipitation and mean monthly average air temperature under forecast conditions. These forecast weather values must remain within a reasonable range about the historical mean values. SYNTOR uses +-30% of the percentiles from the historical monthly mean values as the lower and upper boundaries for the range of SYNTOR-acceptable mean monthly precipitation and average air temperature forecasts.

The user can review the boundaries of the SYNTOR-acceptable range of forecast values in file PTFOR.DAT. It is brought to the user's attention that the acceptable range for air temperature forecasts is fairly narrow. This is in line with the small year-to-year variability of monthly average air temperature of the historical record.

The list of input variables in file SYNGEN.CTR is given in Table 4.1. An example of file SYNCHK.CTR is displayed in Fig. 4.2.

#### 4.2.2 File STACOF.UNF

Unformatted file STACOF.UNF contains daily and monthly weather statistics, regression coefficients, distribution parameters, data descriptor, and program parameter values similar to those in file STACOF.DAT produced by program SYNPAR.

#### 4.2.3 File PRGCNT.UNF

File PRGCNT.UNF contains application titles, program control variables, user options, and other SYNTOR internal parameter values. This file is not accessible to the user and should not be changed, moved, or deleted.

### 4.3 Program Execution

Program SYNGEN is executed after program SYNCHK and SYNPAR have run to completion, files STACOF.UNF and PRGCNT.UNF have been produced, and the user has prepared file SYNGEN.CTR. During processing, run-time messages will appear on the screen to inform the user on the progress of the weather generation. Upon completion of program SYNGEN, file GENWTH.DAT contains the generated daily weather data.

Program SYNGEN can be executed repeatedly for the same application and historical weather data, but with different weather generation options, forecast specifications, and/or random number seeds. This “repeat execution” feature of program SYNGEN is useful for estimating the sensitivity of the generated weather on different random numbers, for generating weather for a number of different forecasts, or any other purposes requiring multiple synthetic weather records under varying boundary conditions. Repeat execution of program SYNGEN does not require programs SYNCHK and SYNPAR to be re-executed, provided the basic application situation and historical data remain the same.

### 4.4 Output Files

Program SYNGEN produces three user-accessible ASCII output files and two unformatted files. The ASCII output files can be viewed with a suitable ASCII editor, such as Microsoft Notepad or Wordpad. The generated daily weather data can also be directly imported into Microsoft Excel. The three ASCII output files are SYNGEN.RPT, CTRGEN.TXT, and GENWTH.DAT. The two unformatted files are GENWTH.UNF and PRGCNT.UNF that are available for SYNTOR extension programs, such as statistical evaluation of the generated weather.

#### 4.4.1 File SYNGEN.RPT

File SYNGEN.RPT contains a detailed log of program execution steps. The user can follow the sequence of the weather generation calculations, find-out about pre-selected internal execution options, review program execution statistics, and check for warnings and cautions.

### 4.4.2 File CTRGEN.TXT

File CTRGEN.TXT contains a replication of user-provided options for the generation of daily weather time-series from file SYNGEN.CTR. It serves primarily as verification that program SYNGEN received and used the correct program information.

### 4.4.3 File GENWTH.DAT

File GENWTH.DAT contains the generated daily weather in metric units; daily weather data is provided in chronologic order, one record per day. Each daily weather record contains up to eight, space delimited columns of data. Each daily record consists of Julian day, day of the month, month of the year, year counter, precipitation [mm], maximum air temperature [deg. C], minimum air temperature [deg. C], and solar radiation [MJ/m^2].

### 4.4.4 File GENWTH.UNF

Unformatted file GENWTH.UNF containing the generated daily weather for potential use by extension programs of SYNTOR. This file is not accessible to the user and should not be changed, moved, or deleted.

### 4.4.5 File PRGCNT.UNF

File PRGCNT.UNF contains program control variables, user options, and other SYNTOR internal parameter values for potential use by extension programs of SYNTOR. This file is not accessible to the user and should not be changed, moved, or deleted.

## 4.5 Tables and Figures

Table 4.1. List of input variables in file SYNGEN.CTR.

---

- Title that describe the current generation of weather data.
- Type of weather data to be generated:
  - 1: Reproduction of historical climate conditions.
  - 2: Seasonal climate forecast conditions.
- Weather variables to be generated:
  - 1: Precipitation.
  - 2: Precipitation and air temperature.
  - 3: Precipitation, air temperature and solar radiation.
- Number of times the random number generator is cycled prior to use. Any number of cycles up to 99’999, including zero, can be chosen.
- The desired number of years of generated weather. The number of years can range from 5 to 10’000 years.
- For the seasonal forecast option, the following forecast specifications are needed:
  - 1: Mean monthly precipitation of the seasonal climate forecast.
  - 2: Mean monthly average air temperature of the seasonal climate forecast.

---

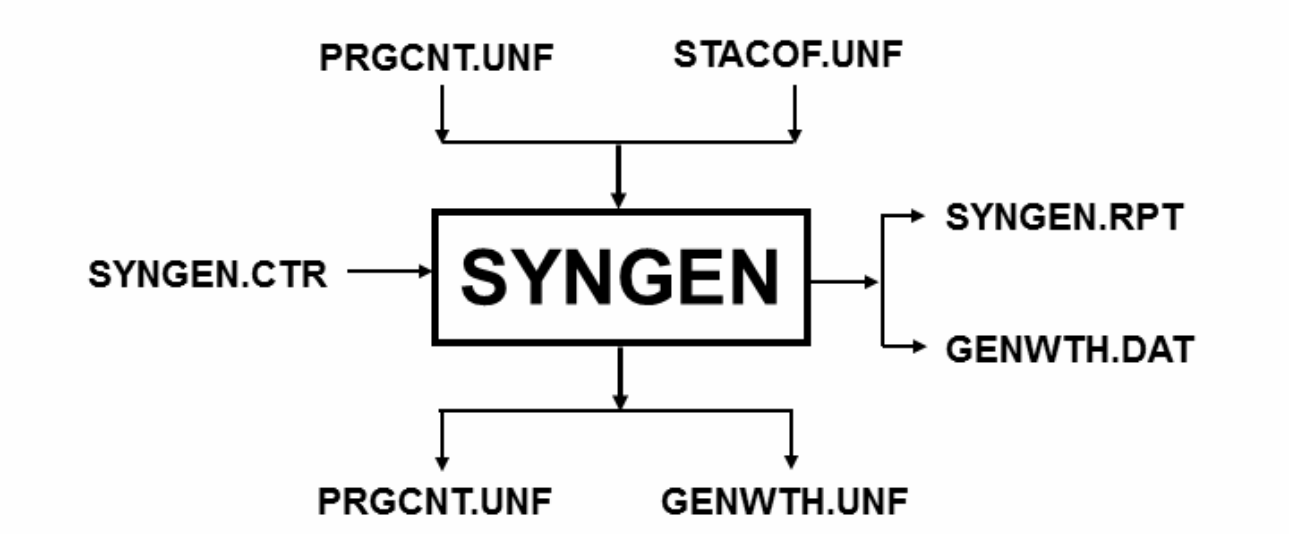


Figure 4.1. Block diagram of input and output files for program SYNGEN.

```
! User provided file SYNGEN.CTR
! *** Weather data generation title.
! [Alpha numeric string up to 80 characters long]
  Generation case: Example forecast application
  March 2005
! ***
! Type of weather generation application:
!   1: reproduction of historical conditions (requires basic historical
!      weather statistics)
!   2: generation of a climate forecast (requires basic historical weather
!      statistics and monthly forecast values; the latter to be provided at
!      the end of this input file)
! [Integer; value 1 or 2]
  2
! ***
! Enter option for weather data that is to be generated:
!   1 : Precipitation only
!   2 : Precipitation, and min and max air temperature
!   3 : Precipitation, min and max air temperature, and solar radiation
! [Integer; value between 1 and 3]
  1
! ***
! Number of years for which generated precipitation is desired (NYRS):
! [Integer; positive number between 5 and 9999, inclusive]
  500
! ***
! Number of times the random number generator is cycled prior to usage (ICYCL):
! [Integer; value of 0 is no cycling; maximum value is 99999999]
  1557
! ***
! Forecasted monthly total precipitation in millimeters
! (total amount over a month).
! [Real; 12 values, one per calendar month]
  54.158  62.105  66.66  104.28  143.59  97.4  52.23  57.415  85.151  81.633  69.677  64.256
! ***
! Forecasted monthly average of daily average air temperature in Degrees
! Celsius (average daily value over a month).
! [Real; 12 values, one per calendar months]
8.468  10.466  11.642  13.113  15.183  17.748  19.190  19.224  18.846  16.336  11.988  8.743
```

Figure 4.2. Reproduction of file SYNGEN.CTR.

Return to Table of Contents

# 5. INSTALLATION AND EXECUTION OF SYNTOR PROGRAMS

SYNTOR programs are written in STANDARD FORTRAN 90 and are provided in an executable format for WINDOWS 95, 98, ME, VISTA, XP and WINDOWS 7 operating systems. The executable programs have been compiled with the Silverfrost FTN95 FORTRAN compiler (Version 6.0).

Note: “Directory” and “folder” in Microsoft Explorer are different names for the same entity of the file management system. For ease of presentation, the term folder will be used in the following.

## 5.1 Installation Steps

- Create a main folder for SYNTOR programs and data files. For discussion purposes, assume this folder is called PRGS (Fig. 5.1). However, the user can select any name.

- Create a subfolder under the existing folder PRGS for SYNTOR verification data files. For discussion purposes, assume this folder is called VERIF (Fig. 5.1).

- Copy provided executable programs SYNCHK.EXE, SYNPAR.EXE, and SYNGEN.EXE into folder PRGS.

- Copy provided input files SYNCHK.CTR, SYNCHK.WTH, and SYNGEN.CTR into folder PRGS. These files are provided input files for verification of proper program installation and execution.

- Copy the provided SALFORD function library (salflibc.dll) into the folder PRGS.

- Copy provided verification output files WTHCHKV.DAT, STACOFV.DAT, and GENWTHV.DAT into folder VERIF.

## 5.2 Execution

After all files are copied in the appropriate folders, SYNTOR programs can be executed in two ways:

- First, by navigating in Windows Explorer to the folder PRGS and double clicking, in order, on the executable file names SYNCHK.EXE, SYNPAR.EXE, and SYNGEN.EXE. Each program must be allowed to execute to full completion before proceeding to execute the next program.

- Second, by opening the command line window, navigating to the directory (folder) PRGS (using the CD command), and typing the executable file name followed by pressing the enter (return) key. Each program must be allowed to execute to full completion before proceeding to execute the next program.

## 5.3 Verification

After the three SYNTOR programs have run to completion, the content of output files WTHCHK.DAT, STACOF.DAT, and GENWTH.DAT should be verified against corresponding files in folder VERIF. If the SYNTOR programs have been properly installed and executed, the content of the output files will be identical.

## 5.4 Tables and Figures

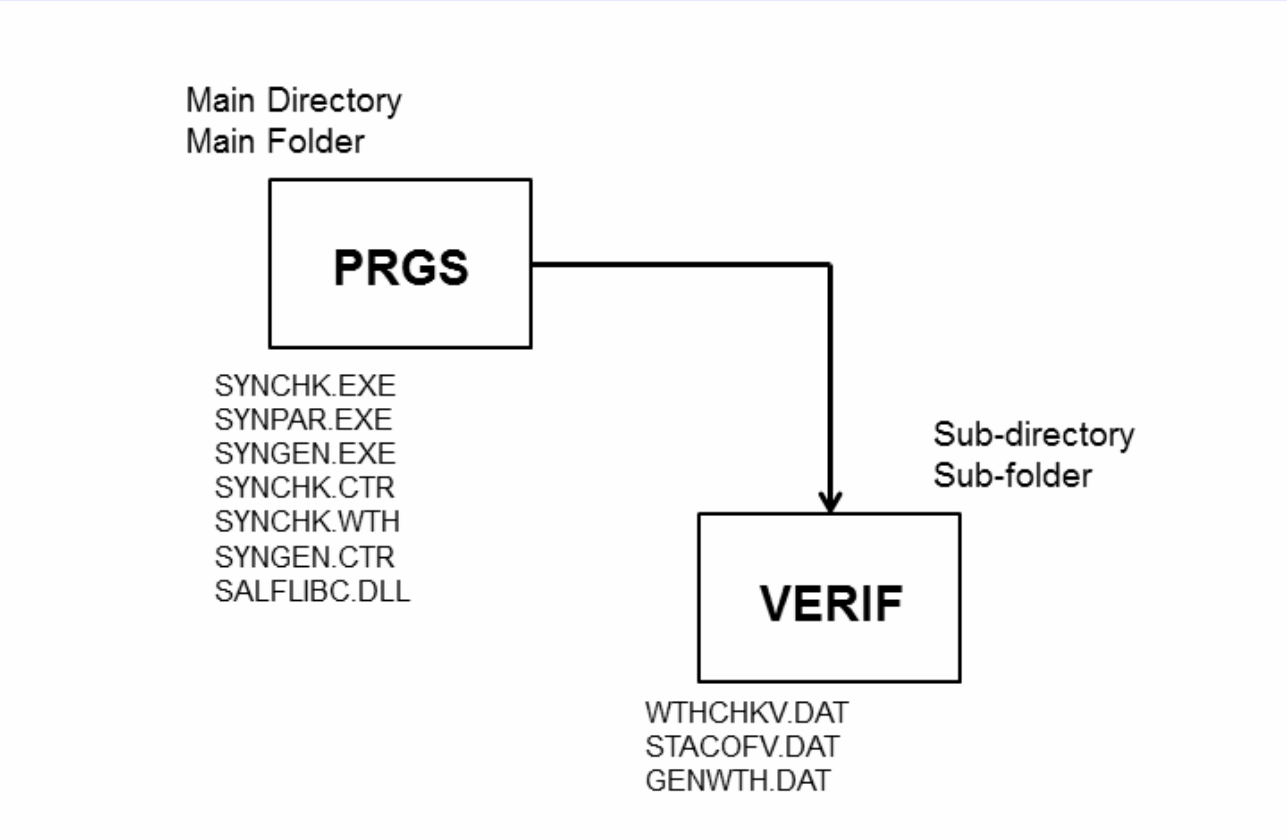


Figure 5.1. Block diagram of the main folder PRGS and subfolder VERIF, and contained files.

Return to Table of Contents