Journal of Insect Behavior, Vol. 16, No. 5, September 2003 (© 2003)

Behavioral Interaction Between Males of *Cephalonomia tarsalis* (Ashmead) (Hymenoptera: Bethylidae) Competing for Females

Ling-lan Cheng,[1] Ralph W. Howard,[2] James F. Campbell,[2] Ralph E. Charlton,[1] James R. Nechols,[1] and Sonny Ramaswamy[1,3]

Accepted May 28, 2003; revised July 7, 2003

Male Cephalonomia tarsalis *(Ashmead) compete with one another for mates. The behavioral interactions between males for mates occur both on and off females. Males winning the first copulation do not exhibit apparent postcopulatory mate-guarding behaviors, and females accept subsequent copulations with losing males soon after separation. The duration of copulation when a second male is present is shorter than when only one male is present. However, females receive sufficient sperm for their life-time female progeny production in copulations disrupted artificially at 10 s (∼1/5 of the regular copulation duration) under normal noncompetition situations. This suggests that shorter copulations because of male–male competition could still result in adequate sperm transfer. Larger males were not more successful in competition than small males, but male competitive ability decreased with age.*

KEY WORDS: mate competition; mating success; copulation; sperm transfer; biological control; parasitoid.

INTRODUCTION

Competition for mates between males has been observed in many animals. Adaptations have evolved in the contexts of mate location, attraction,

[1]Department of Entomology, Kansas State University, Manhattan, Kansas 66506.
[2]Biological Research Unit, Grain Marketing & Production Research Center, 1515 College Avenue, Manhattan, Kansas 66502.
[3]To whom correspondence should be addressed. Fax: (785) 532-6232. e-mail: sonny@ksu.edu.

0892-7553/03/0900-0625/0 © 2003 Plenum Publishing Corporation

possession, defense, and takeover, as well as postinsemination and postfertilization contests (Thornhill and Alcock, 1983), and often form an integral part of stereotyped courtship rituals in many insects (Matthews and Matthews, 1978). In many species, mating competition has led to the evolution of one or more alternative male mating tactics, which may involve mate guarding, female mimicry, sperm plugs, or sperm displacement (Parker, 1970; Thornhill, 1979; Alcock, 1989; Field and Keller, 1993).

The saw-toothed grain beetle, *Oryzaephilus surinamensis* (Linnaeus) (Coleoptera: Silvanidae), is a cosmopolitan stored-product pest. Both larvae and adults cause damage. They are usually found as a secondary pest on grain damaged by other insects such as the granary weevil, *Sitophilus granarius* (Linnaeus) (Coleoptera: Curculionidae) (Jefferies, 1966). *Cephalonomia tarsalis* (Ashmead) (Hymenoptera: Bethylidae) can parasitize either larvae or pupae of the saw-toothed grain beetle. Its basic biology has been reported by Powell (1938). Female wasps first paralyze the host larva using a sting, then may carry the host to a hiding place and deposit eggs. The eggs hatch within 24 h after oviposition. The larva develops as a semiectoparasitoid. It feeds internally, but only the head and prothoracic segment are inside the host, while the remainder of the body is outside. The host is consumed in about 4 days. The larva then spins a cocoon in which it pupates. The pupal stage typically lasts 8–9 days, with male wasps emerging 1–2 days prior to females. Males live about 6 days and can copulate with many different females. The females live about 35 days.

Like other parasitic Hymenoptera, reproduction of *C. tarsalis* involves a system of haplodiplod sex determination. In our preliminary observations, a mated female can lay either a single egg or a pair of eggs on a host. In cases of single egg deposition, 80% are females, whereas in cases of paired eggs, one becomes a male and the other a female. In contrast, a virgin female can also lay either a single or a pair of eggs on a host, but all of them become males. The males resulting from either single or paired eggs deposited by virgin females are bigger than males resulting from the paired eggs produced by mated females. Although there has been a variety of studies on the effects of intraspecific body size variation on male mating success in insects (Mason, 1964; McCauley and Wade, 1978; McCauley, 1979; Hughs and Hughs, 1982; Singer, 1982; Johnson, 1982, 1983; Karban, 1983; Thornhill and Alcock, 1983; Alcock, 1984), little is known about parasitic wasps.

Male *C. tarsalis* from hosts in which a pair of eggs have been deposited emerge 1 to 2 days earlier than females but do not stay in the vicinity of the host after emergence (Cheng *et al.*, in preparation). Thus, sib mating does not seem to be a major phenomenon in this species. The proportion of females in our colonies under current rearing conditions is about 57%. Although the sex ratios of natural populations may be different from the laboratory

colony, intensive female bias is not likely. Males mate many times during their life while females mate only limited times (Cheng *et al.*, in preparation). Receptive females may be limiting for males, suggesting that there may be competition between males for mates. In this study, we describe the behavioral interaction between males for mates and the effects of male size and age on the interactions. Because male competition can reduce copulation duration, the effect of copulation duration on female reproduction was also determined.

MATERIALS AND METHODS

Insects

Stocks of parasitic wasps, *Cephalonomia tarsalis*, and hosts, *Oryzaephilus surinamensis*, were collected from farm-stored wheat in Kansas and have been in laboratory culture since 1994. *Oryzaephilus surinamensis* was reared on rolled oats with 3% brewer's yeast, and *C. tarsalis* was reared on fourth-instar larvae of *O. surinamensis* in wheat. Both wasp and host cultures were held in a rearing chamber at $30 \pm 1°C$ and $55 \pm 10\%$ RH with a photoperiod of 16:8 (L:D) h. All experimental wasps were less than 24 h old and were held in individual vials after pupation to avoid contact with other wasps prior to experiments. The male wasps used in all tests were produced by virgin females.

Behavioral Sequence of Male–Male Interaction for Mates

Two virgin male wasps of similar size and one virgin female wasp, anesthetized on ice for 30 s, were introduced into a cage for observation of how males interacted with each other around the female. The observation cage was constructed by binding together a piece of foam 2 mm thick on a glass microscope slide with double-stick tape. A 7×4-mm cell was cut in the center of the foam, and a piece of light-blue paper was placed under the foam to provide contrast for video recording and as a purchase for the insects. The female was introduced into the cage first followed by the two males. After introduction of the wasps, a cover slide was used to cover the cage top to prevent escape of wasps. The courtship behaviors from initial interaction among three wasps to postcopulation were recorded on Sony HMP 120 Hi-8 format videotapes using a Panasonic digital Hi-8 video camera, Model WV-CP4100 (Panasonic Broadcast and Television Systems Co., Secaucus, NJ), attached to a Wild M8 stereomicroscope (Wild Heerbrugg Ltd.,

Heerbrugg, Switzerland) and a Sony digital Hi-8 video cassette recorder, Model EV-S7000 (Sony Corporation, Park Ridge, NJ). Images were viewed on a Sony KV-27V10 Trinitron stereo color television. Lighting was provided by a fiber-optic continuous ring light and shielded by a filter that was placed on top of the observation cage above the cover slide to give an intensity of 2500 lux (±10%) at the level of the insects. Twenty-eight replications were used, with random ranges of male sizes in the population.

Detailed behavioral categories and related timing were determined through slow-motion video analyses (1/5 of normal speed) and recorded using Noldus Observer version 3.0 behavioral analysis software (Noldus Information Technology b.v., Wageningen, The Netherlands). Frequencies associated with transitions from one behavior to another were tabulated and translated into a first-order transition probability matrix using established methods (Fagen and Young, 1978), with the modification of Charlton and Cardé (1990), which provides equal weighting to the individual behaviors in the consolidated matrix. Self transitions and impossible transitions were left as blanks. These probabilities were then used to generate an ethogram to illustrate the interactions between *C. tarsalis* males for mates.

Effect of Male Size and Age on Male–Male Interactions

To determine the effect of male size on male–male interactions, two sizes of males were used. Large males were generated by virgin females, and small males were generated from paired eggs produced by mated females. Wing lengths of males and females were used as indicators of body size and measured from the wing base to the distal end using a graticule under an optical microscope.

The two differently sized virgin male wasps were held together with one virgin female in the previously described observation cage. Observations were made on which size of male was the first to mate. Eighty replications were used for this investigation. Among these 80 replications, behavioral interactions between males for mates in 26 replications were videotaped and analyzed using the same systems, methods, and software as described above.

Adult male *C. tarsalis* live about 6 days in our laboratory. To determine the effect of male age on mating competition, male wasps of three ages (1, 3, and 5 days old) were confined together with a virgin female in a 10 × 4-mm observation cage as described above to observe which male copulated successfully with the female first. Three colors of Crayola washable classical markers were used to mark male wings to distinguish their age. Colors used in different replications were alternated. Fifty-five replications were used for this observation.

Effect of Copulation Duration on Female Reproduction

Four groups of female wasps were allowed to copulate with males for 10 s, 20 s, 30 s, or through completion (mean, 52.95 s; range, 36–115 s), respectively, in the previously described cage. Males were brushed off the females at the end of the required copulation duration. All copulations were with nonsib virgin males emerging within 24 h. Female wasps from each treatment were introduced individually into ovipositional units: 1.5-cm high × 7.0-cm-diameter petri dishes containing 12.1 ± 0.4 g of wheat and 40 14-day-old saw-toothed grain beetle larvae. A cotton ball wetted with 10% honey water was added to the dish to provide additional nutrition for wasps. All wasps were allowed to oviposit on the host larvae in the petri dishes until death. The wasps were transferred into new ovipositional units twice a week. All oviposition units were held at $30 \pm 1°C$, $55 \pm 10\%$ RH, 16:8 (L:D)-h photoperiod and covered with a piece of white paper. Total number of pupae as well as male and female wasps produced were recorded. Twenty replications were used for each treatment.

Data Analysis

Normally distributed data were analyzed using one-way ANOVA, and nonnormally distributed data were analyzed by the Kruskal–Wallis test. Both analyses were conducted using Statgraphics Plus 4.0 software, 1998 (Manugistics, Inc.). Categorical data were analyzed using two-way contingency table and χ^2 analysis (Zar, 1984). Dependent data were analyzed by sign test (Ott and Longnecker, 2001).

RESULTS

Behavioral Sequence of Male–Male Interaction for Mates

The sequences and transition probabilities of male–male interaction behaviors by *C. tarsalis* are illustrated in Fig. 1, and descriptions of behaviors are in Table I. The ethogram terminates at "dismount" after the successful male finishes copulation. When two males of similar size and one female were released into the cage, the male might fight or court the rival while not on the female's body. The courting movements in male–male interactions were similar to those between males and females (see descriptions in Table I). After mounting, the male in closest contact with the majority of the female's dorsal side was considered to occupy the dominant position. At this time, the other male would compete with him for the dominant position through "court

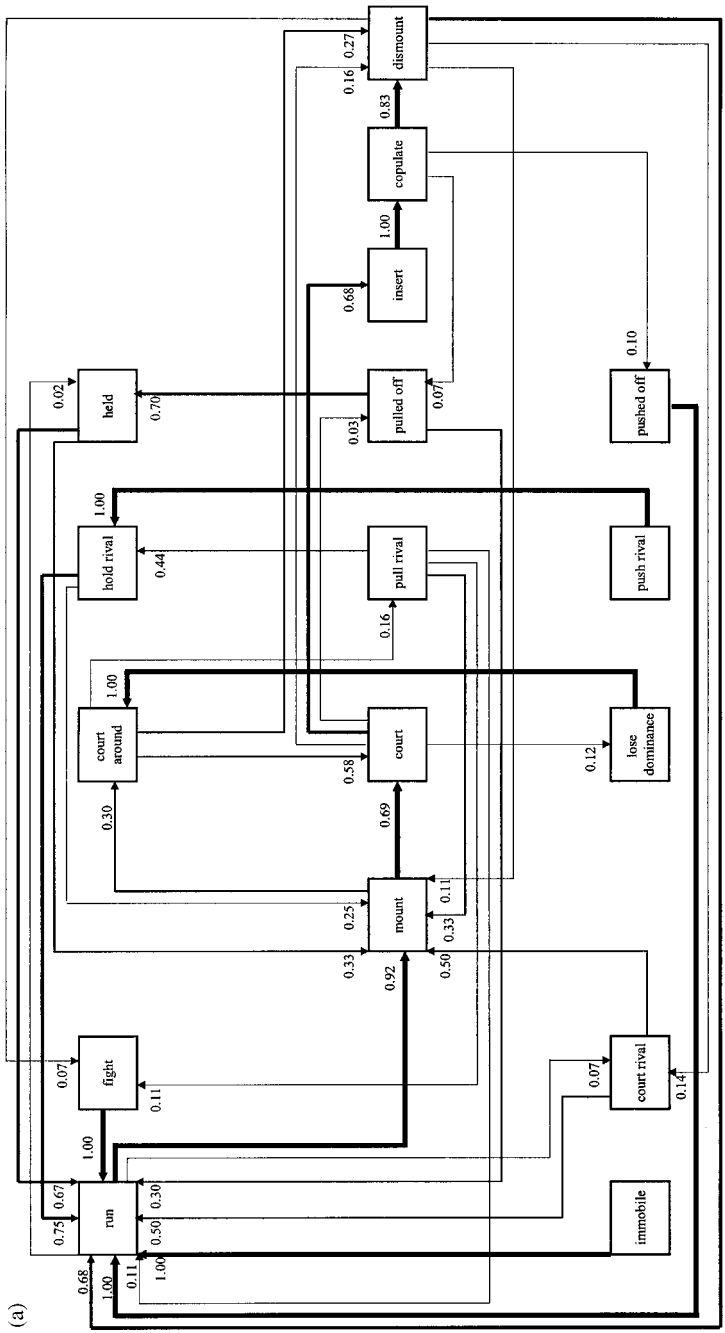

Fig. 1. Flow sequence of interaction between males of same size for mates in *C. tarsalis* ($n = 28$). Transitions with probabilities less than 0.01 are not shown. (a) First-mating male; (b) second-mating male. Thickness of lines and associated decimal numbers denote the behavioral transitions and conditional probabilities.

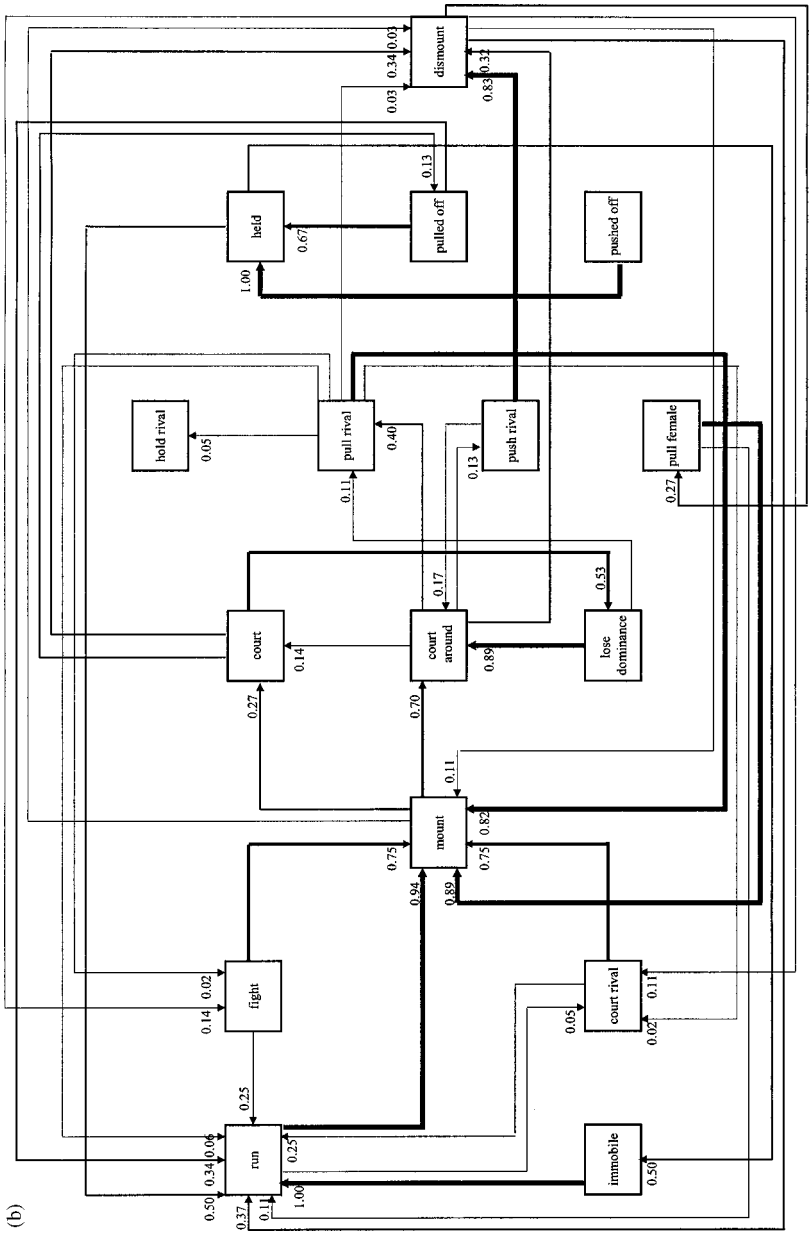

Fig. 1. (Continued.)

Table I. Behavioral Interactions Between Two Males for a Female in *C. tarsalis*

Behavior	Description
Male	
Fight	Twisting with rival around the arena with mouth grasping rival's leg, wing, or antenna, or with legs holding rival's body
Mount	Getting on female in a dorsal riding position beginning with the front legs climbing on from anterior, posterior, or sides of female
Court female	Riding on female's body in a dominant position in relation to the rival and displaying one or several of the following courtship behaviors, i.e., antennae touching female's antennae, antennae tapping female's head or thorax, mouth contacting with female's head or thorax, moving around female's body but without any antennae or mouth contact, extending aedeagus to touch female's abdominal tip
Court rival	Courting rival in the same way as courting female
Pull rival	Grasping the base of rival's antenna, leg, or wing with mandible, then getting off female and staying on certain point of the ground or walking backward on the ground until losing grasp of the rival
Pulled off	Antenna, leg, or wing grasped by rival while in a dominant position on a female and eventually brought off the female but on the ground
Push rival	Head, body, or legs pressing rival
Pushed off	Pressed by rival's head, body, or legs while in a dominant position on a female, and eventually being off the female
Pull female	Grasping female's wing or leg with mandible and pull
Hold rival	Grasping rival's antenna, wing, or leg with mandible and staying at a certain point in the arena, resulting in constraint of rival's movement
Held	Antennae, wing, or leg grasped by rival and body constrained at a certain point in the arena although with 4 legs moving or walking on the ground
Court around	Courting female or rival in a subordinate position on female's body while the rival is courting female in the dominant position
Lose dominance	Lose dominant courting position on the female to rival
Insert	Putting aedeagus into female's genital orifice with or without holding the female's posterior abdomen
Copulate	Copulating with female by assuming posterior dorsal or side position with middle and hind legs holding female's rear end of abdomen; vibrating antennae; rhythmically contracting body, forelegs sweeping on the female's dorsal thorax or abdomen, and head nodding as well as mouth touching female's dorsal body
Dismount	Getting off the female
Female	
Pulled away	Antenna, wing, or leg grasped and pulled by rival male, and eventually forced to separate from the previously dominant male who was courting or copulating with her
Remain stationary	Keeping body immobile, head down, mouth touching the substrate, and antennae still in the front of body
Copulate	Copulating with male while keeping stationary and antennae lowered down
Wave antennae	Vibrating antennae after copulating for a period of time
Male & female	
Run	Running around the arena
Immobile	Staying still in the arena

around," "pull rival," "push rival," or "pull female." The first mounting male did not have a higher probability of getting to mate first ($\chi^2 = 0.202$, $P = 0.1$, df = 1; two-way contingency table and χ^2 analysis). Males that courted the female in a dominant position immediately after mounting were more likely to copulate ($H = 9.192$, $P = 0.002$, df = 1; Kruskal–Wallis test) and were more successful in regaining the dominant position from the rival if the dominant position was lost ($\chi^2 = 15.32$, $P = 0.001$, df = 1; two-way contingency table and χ^2 analysis). When males that were successful in copulating exhibited "court around," "pull rival," and "push rival," they succeeded in taking over the dominant courting position with frequencies of 12/30, 2/5, and 1/1, respectively. On the other hand, males that failed to copulate initially were successful in the same competitive behaviors with frequencies of 8/71, 0/13, and 0/2, respectively.

While the winner was copulating with the female, the loser would stay with the copulating couple and continue to exhibit competitive behaviors, namely, 22 occurrences of "pull rival" and 5 occurrences of "push rival." Losers were able to successfully dislodge the winners three times using "pull rival" and three times using "push rival." None of the losing males successfully dislodged the winners using "court around" or "pull female." After one male was pulled or pushed off of the female, the pulling or pushing male often held the competitor on the ground for a period of time (range: 2.1–5.3 s), then mounted the female and courted.

The numbers of individuals exhibiting various interaction behaviors and the total frequency of each behavior exhibited during the competition between two males are shown in Table II. "Court around" was the behavior most frequently used in the competition followed by "pull rival," and significantly more losers exhibited these two behaviors than did winners ($\chi^2 = 4.61$,

Table II. Number of Individuals Exhibiting Various Behaviors and Total Frequency of Each Behavior Exhibited in Competition Between Males of Same Size ($n = 28$)

Behavior	1st-mating male	2nd-mating male
Fight	2 (2)[a]	3 (3)
Court rival	6 (7)	6 (8)
Pull rival	3 (5)	16 (35)
Pulled off	5 (6)	2 (4)
Push rival	1 (1)	6 (7)
Pushed off	4 (4)	1 (1)
Pull female		10 (14)
Court around	15 (30)	28 (87)
Lose dominance	7 (8)	9 (12)

[a]Numbers in parentheses represent the total frequency that specific behavior exhibited.

$P = 0.05$, df = 1, and $\chi^2 = 4.91$, $P = 0.05$, df = 1, respectively; two-way contingency table and χ^2 analysis).

The female, in the company of competing males, exhibited the same mating behavior sequence as when only one male was present (Cheng *et al.*, 2003, submitted). The female ran around the arena while the two males were courting her and competing on her back, remained stationary when receptive, copulated with the winning male after he inserted his aedeagus, waved antennae to signal completion of copulation, and then moved away from the copulation site. Females did not show observable active choice between mates.

After the female moved away from the copulation site, the winning male would dismount shortly afterward. Although 5 of 28 of the losing males would continue the interaction with the winners through fighting or courting them, most of them would immediately assume the dominant position to court the females, and 27 of 28 of them copulated. The female's mating behavior in the second round was similar to that in the first round. Winning males did not typically interact with the couple again, unless they had been dislodged prior to completion of copulation (i.e., pulled or pushed off). Four of the five males dislodged failed to regain the dominant position.

The latency to mounting by the first male was 37.13 s (ranging from 1.0 to 134.7 s), which was not significantly different ($H = 0.045$, $P = 0.83$, df = 1; Kruskal–Wallis test) from the latency to mounting under no competition (23.27 s; range, 1.3–77.2 s). The duration of first copulation was 20.04 s (range: 7.3 to 33.7 s), which was significantly shorter ($H = 15.822$, $P = 0.001$, df = 1; Kruskal–Wallis test) than that of the second copulation (mean = 28.96 s; range, 17.7–77.3 s). Both copulation durations under the competition situation were significantly shorter ($H = 53.341$, $P = 0.001$, df = 2; Kruskal–Wallis test) than under no competition (mean = 40.4 s; range, 32.1–52.0 s). The latency to first copulation (from mounting of first male) and second copulation (from dismount of winner) ranged from 9.2 to 86.9 s (mean = 36.81 s) and 4.9 to 105.8 s (mean = 23.56 s), respectively. The second latency was significantly shorter than the first ($H = 11.615$, $P = 0.001$, df = 1, Kruskal–Wallis test).

Effect of Male Size and Age on Male–Male Interaction

In 26 observations of the behavioral interactions between males of different size categories, 12 large males mounted females first, 8 small males mounted first, and in six cases, males of both sizes mounted females at the same time. Among these males, 14 larger males won the first copulation compared with 12 smaller males. The behavioral transition probabilities of first and second mating males in the competition are shown in Tables III and IV. The first males to successfully mate, no matter if they were large

Table III. Behavioral Transition Probabilities of First-Mating Males in Competition Between Males of Different Sizes ($n = 26$)[a]

Preceding behavior	Size	Following behavior																
		Rn	Ft	Mt	Ct	Ctr	Plr	Plo	Psr	Pso	Plf	Hdm	Hl	Cta	Lod	Is	Cp	Dt
Rn	L		0.03	0.91		0.06												
	S		0.08	0.82		0.1												
Ft	L	0.38		0.63														
	S	1.00																
Mt	L				0.76									0.22				0.03
	S				0.65									0.29				0.06
Ct	L							0.04		0.02					0.15	0.65		0.15
	S														0.18	0.68		0.13
Ctr	L	0.33		0.67														
	S	0.75		0.25														
Plr	L		0.46									0.13		0.42				
	S					1.00												
Plo	L	0.50	0.25										0.25					
	S	1.00																
Psr	L						1.00											
	S																	
Pso	L	0.75											0.25					
	S																	
Plf	L																	
	S																	
Hdm	L	1.00																
	S																	
Hl	L																	
	S																	
Cta	L				0.55		0.18		0.03									0.23
	S				0.80		0.20											0.20
Lod	L						0.29							0.71				
	S													1.00				
Is	L																1.00	
	S																1.00	
Cp	L							0.18		0.06								0.76
	S				0.1			0.10										0.80
Dt	L	0.50	0.07	0.14		0.29												
	S	0.33		0.33		0.33												

[a] L: large male; S: small male; Rn: run; Ft: fight; Mt: mount; Ct: court; Ctr: court rival; Plr: pull rival; Plo: pulled off; Psr: push rival; Pso: pushed off; Plf: pull female; Hdr: hold rival; Hl: held; Cta: court around; Lod: lose dominance; Is: insert; Cp: copulate; Dt: dismount.

Table IV. Behavioral Transition Probabilities of Second-Mating Males in Competition Between Males of Different Sizes ($n = 26$)[a]

Preceding behavior	Size	Following behavior														
		Rn	Ft	Mt	Ct	Ctr	Pl	Plo	Ps	Pso	Plf	Hdr	Hl	Cta	Lod	Dt
Rn	L		0.03	0.90		0.07										
	S			0.88		0.11	0.01									
Ft	L	1.00														
	S					1.00										
Mt	L				0.22				0.03					0.62	0.02	0.11
	S				0.13	0.86										0.02
Ct	L							0.11							0.50	0.39
	S							0.28							0.61	0.11
Ctr	L	1.00														
	S	0.20		0.80												
Pl	L			1.00												
	S	0.50		0.25										0.25		
Plo	L	1.00														
	S	0.67		0.33												
Ps	L						1.00							1.00		
	S											0.50				0.50
Pso	L															
	S															
Plf	L			0.84										0.17		
	S			1.00												
Hdr	L															
	S	1.00														
Hl	L															
	S															
Cta	L				0.25		0.34		0.08							0.33
	S				0.24		0.30		0.04							0.42
Lod	L													1.00		
	S													0.73		0.27
Dt	L	0.44		0.31							0.25					
	S	0.46	0.05	0.20		0.10	0.03				0.15					

[a] L: large male; S: small male; Rn: run; Ft: fight; Mt: mount; Ct: court; Ctr: court rival; Plr: pull rival; Plo: pulled off; Psr: push rival; Pso: pushed off; Plf; pull female; Hdr: hold rival; Hl: held; Cta: court around; Lod: lose dominance; Is: insert; Cp: copulate; Dt: dismount.

or small, were characterized by a higher probability ($H = 21.672$, $P = 0.001$, df = 1; Kruskal–Wallis test) of courting females in a dominant position after mounting, a lower probability ($H = 13.827$, $P = 0.001$, df = 1; Kruskal–Wallis test) of losing the dominant position while courting females, and a higher probability ($H = 7.098$, $P = 0.008$, df = 1; Kruskal–Wallis test) of transitioning to courting in the dominant position after courting in the subordinate position. Among first mating males, more small than large individuals exhibited "court male" and "court around" ($\chi^2 = 6.51$, $P = 0.025$, df = 1, and $\chi^2 = 8.42$, $P = 0.005$, df = 1, respectively; two-way contingency table and χ^2 analysis) (Table V). There was no significant difference between the two sizes in second mating males exhibiting various competitive behaviors ($\chi^2 = 3.841$, $P = 0.05$, df = 1; two-way contingency table and χ^2 analysis).

Although the first copulation duration was significantly shorter ($H = 9.646$, $P = 0.002$, df = 1; Kruskal–Wallis test) than the second copulation duration, there were no significant differences in copulation duration between

Table V. Number of Individuals Exhibiting Various Behaviors and Total Frequency of Each Behavior Exhibited in Competition Between Males of Different Sizes

Behavior	1st-mating male	
	Large ($n = 16$)	Small ($n = 10$)
Fight	4 (5)[a]	1 (1)
Court rival	2 (2)	5 (5)
Pull rival	4 (8)	5 (7)
Pulled off	4 (5)	1 (1)
Push rival	1 (1)	2 (3)
Pushed off	2 (3)	
Pull female		2 (4)
Court around	9 (14)	10 (28)
Lose dominance	6 (7)	6 (6)
	2nd-mating male	
	Large ($n = 10$)	Small ($n = 16$)
Fight	1 (1)	1 (1)
Court rival	2 (2)	5 (8)
Pull rival	5 (7)	6 (8)
Pulled off	1 (1)	3 (3)
Push rival	1 (1)	2 (3)
Pushed off	1 (2)	
Pull female	2 (4)	2 (2)
Court around	10 (27)	16 (42)
Lose dominance	6 (6)	5 (6)

[a]Numbers in parentheses represent the total frequency that specific behavior exhibited.

male sizes for both the first and the second copulations ($H = 3.319$, $P = 0.07$, df = 1, and $H = 0.117$, $P = 0.73$, df = 1, respectively; Kruskal–Wallis test). The latencies from mounting to a female's first copulation with larger males (mean = 40.36 s; range, 6.8–166.7 s) were not significantly different from those with smaller males (mean = 39.63 s; range, 19.5–91.7 s) ($H = 1.277$, $P = 0.258$, df = 1; Kruskal–Wallis test). However, the latency from the dismount of the first mating male to the female's second copulation with small males (mean = 12.56 s; range, 6.6–29.5 s) was significantly shorter than that with larger males (mean = 33.62 s; range, 7.6–128.0 s) ($H = 5.019$, $P = 0.025$, df = 1; Kruskal–Wallis test). The latency to first mounting was not significantly different whether females were exposed to males of the same or different sizes ($H = 3.784$, $P = 0.052$, df = 1; Kruskal–Wallis test). The latency to first mounting was not different for different-sized males ($H = 0.684$, $P = 0.41$, df = 1; Kruskal–Wallis test).

We also made 80 observations to determine the impact of body size on mating success. The sizes of large males, small males, and females were 1.203 ± 0.008 mm ($n = 80$), 0.958 ± 0.010 mm ($n = 80$), and 1.268 ± 0.005 mm ($n = 80$), respectively. In 62.5% of observations, the large male was first to copulate, but there was no statistical difference between the two size classes ($\chi^2 = 2.057$, $P = 0.1$, df = 1; two-way contingency table and χ^2 analysis).

With respect to the influence of male age on mating, 1-day-old males were significantly more likely to mate first than 3- or 5-day-old males (M = 16.5 and 15.5, respectively; $P = 0.0001$, sign test). There was no significant difference between 3- and 5-day-old males (M = 4.5; $P = 0.20$, sign test). Old males were less likely to compete for females; 12 of 55 5-day-old males and 3 of 55 3-day-old males did not joint the competition. Usually, three males would not fight with or court one another before mounting the female; instead, all of them would immediately try to mount the female. Other interactive behaviors among three males were similar to that between two males. When the first male copulated with a female, the other two would keep competing with him as well as with each other. The successful male that obtained the first copulation would not join the competition again, and the other two would compete for the female's second copulation. After the second male completed the copulation, the last male would get the female's third copulation. But in two cases, the 3-day-old male did not mount the female after the previous two males finished copulation, and, finally, the 1-day-old male mated with the female again. Also, there were nine cases where 5-day-old males did not mount females within 15 min after the other two males finished copulation. In contrast, females did not exhibit observable active choice on mates' ages, and the courting time for their third copulations was not different from that for the one-male and one-female situation.

Table VI. Fecundity and Longevity of *C. tarsalis* Females That Had Experienced Various Durations of Copulation[a]

	Duration of copulation			
	10 s	20 s	30 s	Completion
No. of cocoons produced/female	106–220 (178.7 ± 9.2)	141–239 (193.9 ± 7.0)	123–250 (191.1 ± 9.3)	91–245 (186.9 ± 13.0)
Proportion female progeny	0.27–0.65 (0.53 ± 0.03)	0.31–0.72 (0.50 ± 0.03)	0.37–0.69 (0.49 ± 0.03)	0.42–0.71 (0.53 ± 0.02)
Longevity (days)	17–56 (34.1 ± 2.5)	14–80 (40.7 ± 3.3)	21–59 (35.2 ± 2.2)	10–56 (34.7 ± 2.6)

[a] Numbers in first row represent the range, and numbers in parentheses in second row represent the mean ± SE.

Effect of Copulation Duration on Female Reproduction

Copulation duration did not significantly affect female longevity ($P = 0.46$; Kruskal–Wallis test), total offspring production ($F = 0.46$, $P = 0.71$, df = 3; ANOVA), or proportion of female progeny ($F = 0.47$, $P = 0.70$, df = 3; ANOVA) (Table VI). Over 85% of female offspring in all four groups were produced within 21 days of oviposition. After day 24, the proportion of female offspring production dropped significantly and gradually reached 0 after day 35 (Fig. 2).

DISCUSSION

"Fight," "court rival," "court around," "pull rival," "push rival," and "pull female" are the major tactics used by *C. tarsalis* males while competing with rivals. Among these actions, "fight" and "court rival" may serve to prevent rivals from mounting potential mates; "court around" may serve to distract rivals from courtships and cause a loss of dominant position; and "pull rival," "push rival," and "pull female" are behaviors used to aggressively separate rivals from potential mates. In *C. tarsalis*, the winners (first mating males) were more successful in both defending and taking over the dominant position. However, losers exhibited significantly higher frequencies of competitive behaviors, suggesting that success in defending dominant position is more efficient in leading to successful matings. The competition between males starts from before mounting until winners finish copulation, and "court around" is the most common behavior observed. The interactions between males did not prolong the time for males to mount the females. However, they shortened the copulation duration. Even the duration

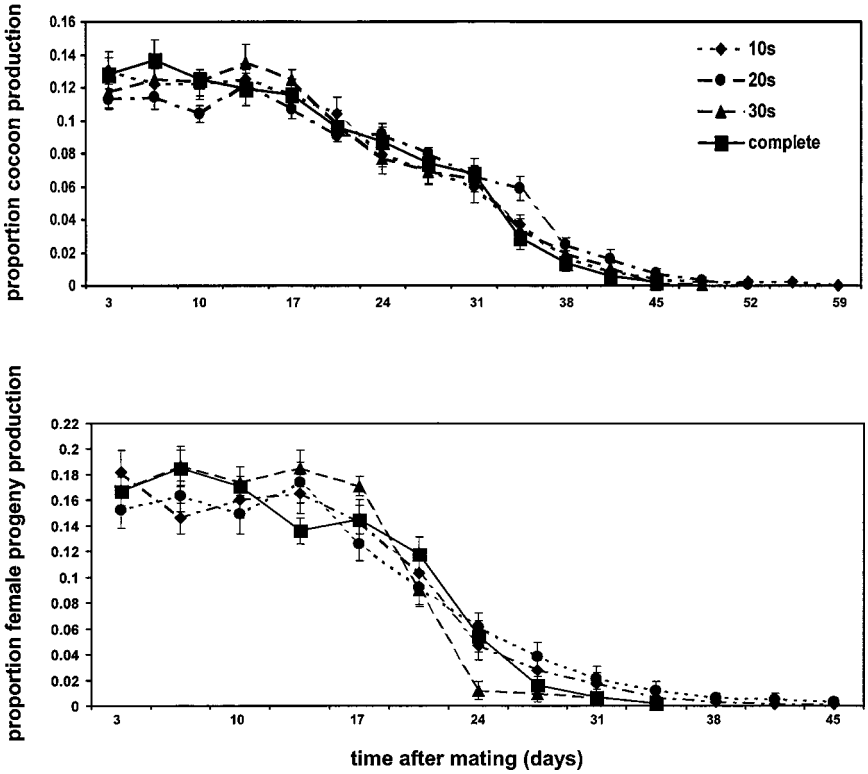

Fig. 2. Mean proportion of cocoons and female progeny (±SE) produced over time by females with various copulation duration.

of second copulations, in which the winning males did not interact again, was shorter than that in no-competition situations. These findings suggest that females may also play a role in reducing copulation duration in the presence of multiple males.

The durations of copulation did not significantly affect female longevity, total offspring production, proportion of female progeny, or ovipositional patterns. This suggests that males ejaculate sufficient sperm for female lifetime fertility in a copulation duration as short as 10 s. Since most of the copulations under competition were longer than 10 s, competing males have sufficient time to transfer sperm to females. Most insects transfer more sperm than is actually needed for fertilizing all eggs, and the seminal fluid in many male insects has been shown to provide nutrition,

defensive components, or mating repellents for females (Thornhill and Alcock, 1983). Some parasitic wasps have been observed to display postcopulatory guarding through prolonged copulation, female mimicry, or postcopulatory courtship to minimize sperm competition (Gordh and Debach, 1978; Kajita 1986; Field and Keller, 1993; Allen *et al.*, 1994; van den Assem and Werren, 1994; Eberhard, 1994; Ruther *et al.*, 2000). In addition, some male insects, such as *Calopteryx maculata* (Odonata: Lestidae), *Psacothea hilaris* (Coleoptera: Cerambycidae), and *Athalia rosae* (Hymenoptera: Tethredinidae), have been found to remove sperm of rivals from previous matings during the first half of copulation and ejaculate their own sperm in the latter half of copulation (Waage, 1979; Yokoi, 1990; Shigemura and Naito, 1999). Male *C. tarsalis* copulate longer than is needed for sperm transfer. However, this does not appear to be very effective if it is a mate guarding tactic since total duration is still relatively short, females mate again soon after separation, and females appear to control duration of copulation. Further research is needed to investigate the degree of sperm precedence in this species.

Sperm precedence in parasitic wasps varies. There have been some studies on *L. distinguendus* (Hymenoptera; Pteromalidas), *Diadromus pulchellus* (Hymenoptera: Ichneumonidae), and *Aphytis melinus* (Hymenoptera: Aphelinidae) showing first-male precedence (van den Assem *et al.*, 1989; Allen *et al.*, 1994; El Agoze *et al.*, 1995), while others such as *Nasonia vitripennis* (Hymenoptera: Pteromalidae) show no precedence for first or second male (van den Assem and Feuth-de Bruin, 1977; Beukeboom, 1994). When taking account of the time interval between matings, Wilkes (1966) reported a strong first-male precedence in *Dahlbominus fuscipennis* (Hymenoptera: Eulophidae) if the interval between matings was greater than 24 h but approximately equal precedence if the interval was shorter. The opposite trend was observed by Martínez-Martínez *et al.* (1993) with genetically marked stock of *Diachasmimorpha longicaudata* (Hymenoptera: Braconidae). The latter species showed no particular first- or second-male precedence when the intermating interval was short (less than 6 min), however, when the intermating period was approximately 24 h, the proportion of eggs fertilized by the second male was markedly higher (75%).

There is no relationship between male size and copulation success. However, among the winners, the smaller males perform more competitive behaviors than do larger males, even though the larger and smaller males did not differ in time to win the female's first copulation. Among the losers, small males proceeded more quickly than larger ones to copulate with a previously mated female. These competitive behaviors may help small males gain access to mates. In addition, male size does not affect the duration of

copulation for both the first and the second copulations. This implies that females allow similar durations of copulation to males regardless of size since the female *C. tarsalis* plays a role in controlling copulation duration (Cheng *et al.*, 2003).

Although there have been many studies showing that larger males have a mating advantage over smaller males, most of them have described aggressive male–male competition, defense of territory, or resource provision (Mason, 1964; McCauley and Wade, 1978; Alcock, 1979, 1984; McCauley, 1979; Hughs and Hughs, 1982; Singer, 1982; Johnson, 1982, 1983; Karban, 1983; Thornhill and Alcock, 1983; Juliano, 1985; Alcock and Gwynne, 1987; Vencl and Carlson, 1998; Bateman, 2000). In some parasitoids, like *Lariophagus distinguendus* (Hymenoptera: Pteromalidae), body size is not important for males to compete successfully (van den Assem *et al.*, 1989). This is true also in *C. tarsalis*. However, the major agonistic behavior displayed by *L. distinguendus* males during competition is "pushing," and the duration of copulation under competition is increased. van den Assem *et al.* (1989) suggested that the prolonged duration of copulation may serve to reduce the probability of a second copulation in females. This is different from our finding in *C. tarsalis*. The current study showed that male age had a negative effect on competition success in *C. tarsalis*, which appears to be the result of the decreased activity with aging.

Mating success in males depends not only on success in physical competition between males but also female's choice and sperm competition after insemination. However, the adaptive role of observable female choice is more controversial in species in which males show no parental care or no protection or nurturing of females (Williams, 1975; Halliday, 1978; Maynard Smith, 1978; Borgia, 1979; Harpending, 1979; Thornhill, 1980). Males of *C. tarsalis* probably contribute only sperm to females, so it is not surprising that females do not show observable active mate choice. However, females may exhibit sexual selection through cryptic mate choice in using sperm from multiple mates. Female *C. tarsalis* accept multiple matings during the first 3 days after commencing oviposition; this may enable them to perform in cryptic mate choice. On the other hand, male *C. tarsalis* do not appear to effectively prevent mates from mating again with other males. This increases the potential for sperm competition. Sperm precedence in *C. tarsalis* and the role of the female in sexual selection needs to be investigated before we can understand why females mate multiply and the function of competition patterns among males of this species. This study represents the mating behavior of a laboratory colony in this species. The probability of male mating competition in natural situations, and its selective fitness needs further investigations.

ACKNOWLEDGMENTS

We thank T. M. Loughin for assistance in statistical analyses and R. Speirs for rearing the insects. We thank the two anonymous reviewers and G. Zolnerowich, H. Tunaz, and D. Jones for critically reviewing the manuscript. Voucher specimens (No. 137) have been deposited at the Museum of Entomological and Prairie Arthropod Research, Department of Entomology, Kansas State University. This is Contribution No. 03-112-J of the Kansas Agricultural Experiment Station, Kansas State University, Manhattan.

REFERENCES

Alcock, J. (1979). The behavioural consequences of size variation among males of the territorial wasp *Hemipepsis ustulata* (Hym., Pompilidae). *Behaviour* **71:** 322–335.

Alcock, J. (1984). Long term maintenance of size variation in two populations of *Centris pallida* (Hymenoptera: Anthophoridae). *Evolution* **38:** 220–223.

Alcock, J. (1989). *Animal Behavior: An Evolutionary Approach*, 4th ed. Sinauer Associates, Sunderland, MA.

Alcock, J., and Gwynne, D. T. (1987). Courtship feeding and mate choice in thynnine wasps (Hymenoptera: Tiphiidae). *Aust. J. Zool.* **35:** 39–47.

Allen, G. R., Kazmer, D. J., and Luck, R. F. (1994). Postcopulatory male behavior, sperm precedence and multiple mating in a solitary parasitoid wasp. *Anim. Behav*. **48:** 635–644.

Bateman, P. W. (2000). The influence of weapon asymmetry on male-male competition success in a sexually dimorphic insect the African king cricket *Libanasidus vittatus* (Orthoptera: Anostostomatidae). *J. Insect Behav.* **13:** 157–163.

Beukeboom, L. W. (1994). Phenotype fitness effects of the selfish B-chromosome, paternal sex-ratio (PSR) in the parasitic wasp *Nasonia vitripennis*. *Evol. Ecol*. **8:** 1–24.

Borgia, G. (1979). Sexual selection and the evolution of mating systems. In Blum, M. S., and Blum, N. A. (eds.), *Sexual Selection and Reproductive Competition in Insects*, Academic Press, New York, pp. 19–80.

Charlton, R. F., and Cardé, R. T. (1990). Behavioral interactions in the courtship of *Lymantria dispar* (Lepidoptera: Lymantriidae). *Ann. Entomol. Soc. Am*. **83:** 89–96.

Eberhard, W. G. (1994). Evidence for widespread courtship during copulation in 131 species of insects and spiders, and implications for cryptic female choice. *Evolution* **48:** 711–733.

El Agoze, M., Poirié, M., and Périquet, G. (1995). Precedence of the first male sperm in successive matings in the Hymenoptera *Diadromus pulchellus*. *Entomol. Exp. Appl*. **75:** 251–255.

Fagen, R. M., and Young, D. Y. (1978). Temporal patterns of behavior: durations, intervals, latencies, and sequences. In Colgan, P. W. (ed.), *Quantitative Ethology*, Wiley, New York, pp. 79–114.

Field, S. A., and Keller, M. A. (1993). Alternative mating tactics and female mimicry as post-copulatory mate-guarding behavior in the parasitic wasp *Cotesia rubecula*. *Anim. Behav*. **46:** 1183–1189.

Gordh, G., and Debach, P. (1978). Courtship behavior in the *Aphytis lingnanensis* group, its potential usefulness in taxonomy, and a review of sexual behavior in the parasitic Hymenoptera (Chalc.; Aphelinidae). *Hilgardia* **46:** 37–75.

Halliday, T. R. (1978). Sexual selection and mate choice. In Krebs, J. R., and Davies, N. B. (eds.), *Behavioural Ecology: An Evolutionary Approach*, Sinauer Associates, Sunderland, MA, pp. 180–213.

Harpending, H. C. (1979). The population genetics of interaction. *Am. Nat*. **113:** 622–630.
Hughs, A. L., and Hughs, M. K. (1982). Male size, mating success, and breeding habitat partitioning in the white spotted sawyer *Monochamus scutellatus* (Say) (Coleoptera: Cerambycidae). *Oecologia* **55:** 258–263.
Jefferies, D. J. (1966). Susceptibility of the saw-toothed grain beetle *Oryzaephilus surinamensis* (L.). In Cornwell, P. B. (ed.), *The Entomology of Radiation Disinfestation of Grain*, Pergamon Press, London. pp. 119–130.
Johnson, L. K. (1982). Sexual selection in a tropical brentid weevil. *Evolution* **36:** 251–262.
Johnson, L. K. (1983). Reproductive behavior of *Claeoderes bivittata* (Coleoptera: Brentidae). *Psyche* **90:** 135–149.
Juliano, S. A. (1985). The effects of body size on mating and reproduction in *Brachinus lateralis* (Coleoptera: Carabidae). *Ecol. Entomol*. **10:** 271–280.
Kajita, H. (1986). Role of postcopulatory courtship in insemination of two aphelinid wasps (Hymenoptera: Aphelinidae). *Appl. Entomol. Zool*. **21:** 484–486.
Karban, R. (1983). Sexual selection, body size and sex-related mortality in the cicada *Magicicada cassini*. *Am. Midl. Nat*. **109:** 324–330.
Martínez-Martínez, L., Leyva-Vázquez, J. L., and Mojica, H. B. (1993). Utilizacion del esperma en hembras de *Diachasmimorpha longicaudata*. *Southwest. Entomol*. **18:** 293–299.
Mason, L. G. (1964). Stabilizing selection for mating fitness in natural populations of *Tetraopes*. *Evolution* **18:** 492–497.
Matthews, R. W., and Matthews, J. R. (1978). *Insect Behavior*, John Wiley, New York.
Maynard Smith, J. (1978). *The Evolution of Sex*, Cambridge University Press, Cambridge.
McCauley, D. E. (1979). Geographic variation in body size and its relation to the mating structure of *Tetraopes* populations. *Heredity* **42:** 143–148.
McCauley, D. E., and Wade, M. J. (1978). Female choice and the mating structure of a natural population of the soldier beetle *Chauliognathus pennsylvanicus*. *Evolution* **32:** 771–775.
Ott, R. L., and Longnecker, M. (2001). *An Introduction to Statistical Methods and Data Analysis*, 5th ed., Duxbury, Thomson Learning, Pacific Grove, CA.
Parker, G. A. (1970). Sperm competition and its evolutionary consequences in the insects. *Biol. Rev*. **45:** 528–568.
Powell, D. (1938). The biology of *Cephalonomia tarsalis* (Ash.), a vespoid wasp (Bethylidae: Hymenoptera) parasitic on the sawtoothed grain beetle. *Ann. Entomol. Soc. Am*. **31:** 44–48.
Ruther, J., Homann, M., and Steidle, J. L. M. (2000). Female-derived sex pheromone mediates courtship behaviour in the parasitoid *Lariophagus distinguendus*. *Entomol. Exp. Appl*. **96:** 265–274.
Shigemura, T., and Naito, T. (1999). The mechanism of sperm displacement in the turnip sawfly, *Athalia rosae* (Hymenoptera: Tenthredinidae). *Entomol. Sci*. **2:** 61–65.
Singer, M. C. (1982). Sexual selection for small size in male butterflies. *Am. Nat*. **119:** 440–443.
Statgraphics (1998). Statgraphics Plus for Windows, version 4.0 user's guide. Statistical Graphics, Rockville, MD.
Thornhill, R. (1979). Adaptive female-mimicking behavior in a scorpionfly. *Science* **205:** 412–414.
Thornhill, R. (1980). Sexual selection in the blacktipped hangingfly. *Sci. Am*. **242:** 138–145.
Thornhill, R., and Alcock, J. (1983). *The Evolution of Insect Mating Systems*, Harvard University Press, Cambridge, MA.
van den Assem, J., and Feuth-de Bruin, E. (1977). Second matings and their effect on the sex ratio of the offspring in *Nasonia vitripennis* (Hymenoptera: Pteromalidae). *Entomol. Exp. Appl*. **21:** 23–28.
van den Assem, J., and Werren, J. H. (1994). A comparison of the courtship and mating behavior of three species of *Nasonia* (Hymenoptera, Pteromalidae). *J. Insect Behav*. **7:** 53–66.
van den Assem, J., van Iersal, J. J. A., and los den Hartogh, R. L. (1989). Is being large more important for female than for male parasitic wasps? *Behaviour* **108:** 160–195.
Vencl, F. V., and Carlson, A. D. (1998). Proximate mechanisms of sexual selection in the firefly *Photinus pyralis* (Coleoptera: Lampyridae). *J. Insect Behav*. **11:** 191–207.

Waage, J. K. (1979). Dual function of the damselfly penis: Sperm removal and transfer. *Science* **203:** 916–918.
Wilkes, A. (1966). Sperm utilization following multiple insemination in the wasp *Dahlbominus fuscipennis*. *Can. J. Genet. Cytol*. **8:** 451–461.
Williams, G. C. (1975). *Sex and Evolution*, Princeton University Press, Princeton, NJ.
Yokoi, N. (1990). The sperm removal behavior of the yellow spotted longicorn beetle *Psacothea hilaris* (Coleoptera: Cerambycidae). *Appl. Entomol. Zool*. **25:** 383–388.
Zar, J. H. (1984). *Biostatistical Analysis*, Prentice–Hall, Englewood Cliffs, NJ.